PIONEER

Schaltbilder Receiver

PIONEER

PIONEER

ALLEINIMPORT FÜR DEUTSCHLAND

C. MELCHERS & CO., 28 BREMEN 1, SCHLACHTE 39/40, TEL. 31691, TELEX 2448399

Diese Zusammenstellung der Schaltbilder von PIONEER- Receivern soll Ihnen beim Service unserer Geräte helfen, die Ersatzteilbestellung vereinfachen und nicht zuletzt die Lieferzeit verkürzen.

Die Firma PIONEER liefert Ihre Geräte in über 56 Länder mit den verschiedensten Ausführungen. Wir haben uns bei der Zusammenstellung dieser Broschüre auf die Geräte konzentriert, die in der BRD verkauft wurden, doch kann es in dem einen oder anderen Fall vorkommen, dass auch Schaltungen mit aufgeführt sind, die zu anderen Geräteausführungen gehören, aus techn. Gründen jedoch nicht weggelassen werden konnten.

Zur Ersatzteilbestellung noch folgender Hinweis:

Können Sie ein gewünschtes Teil nicht genau bestimmen, geben Sie uns bitte Typ und Seitenzahl des Schaltbildes an, zusätzlich können Sie noch den Platz auf der Zeichnung lokalisieren, indem Sie den Abstand vom unteren Rand und dem rechten Rand der Seite zum gesuchten Teil angeben, damit auch wir das gesuchte Ersatzteil schneller finden.

Mit freundlichen Grüssen
C. Melchers & Co.
-Serviceabteilung-

Preis: DM 7,50

Inhaltsverzeichnis (serie 1)

RECEIVER (Röhrentyp)	Seite
ER - 420	1
SM - B 200	2
SM - B 200 A	3
SM - G 204 / G 204 B	4
SM - Q 300 / Q 300 A / Q 300 B	5
SM - 600	6
SX - 34	7
SX - 34 B / 34 Bk	8
SX - 40	9
SX - 82	10
SX - 82 E	11
SX - 800	12
SX - 800 A / SX - 2000	13 / 14

RECEIVER (transistoriert)	Seite
SX - 300 T	15 / 21
SX - 440 / FVW / KC	22 / 27
SX - 525	28 / 31
SX - 600 T	32 / 34
SX - 626	35 / 38
SX - 700 T / F	39 / 43
SX - 770	44 / 49
SX - 990	50 / 57
SX - 1000 T	58 / 60
SX - 1000 TA	61 / 63
SX - 1000 TD	64
SX - 1500 T	65 / 69
SX - 1500 TD	70 / 76
SX - 2500	77 / 83

ER-420

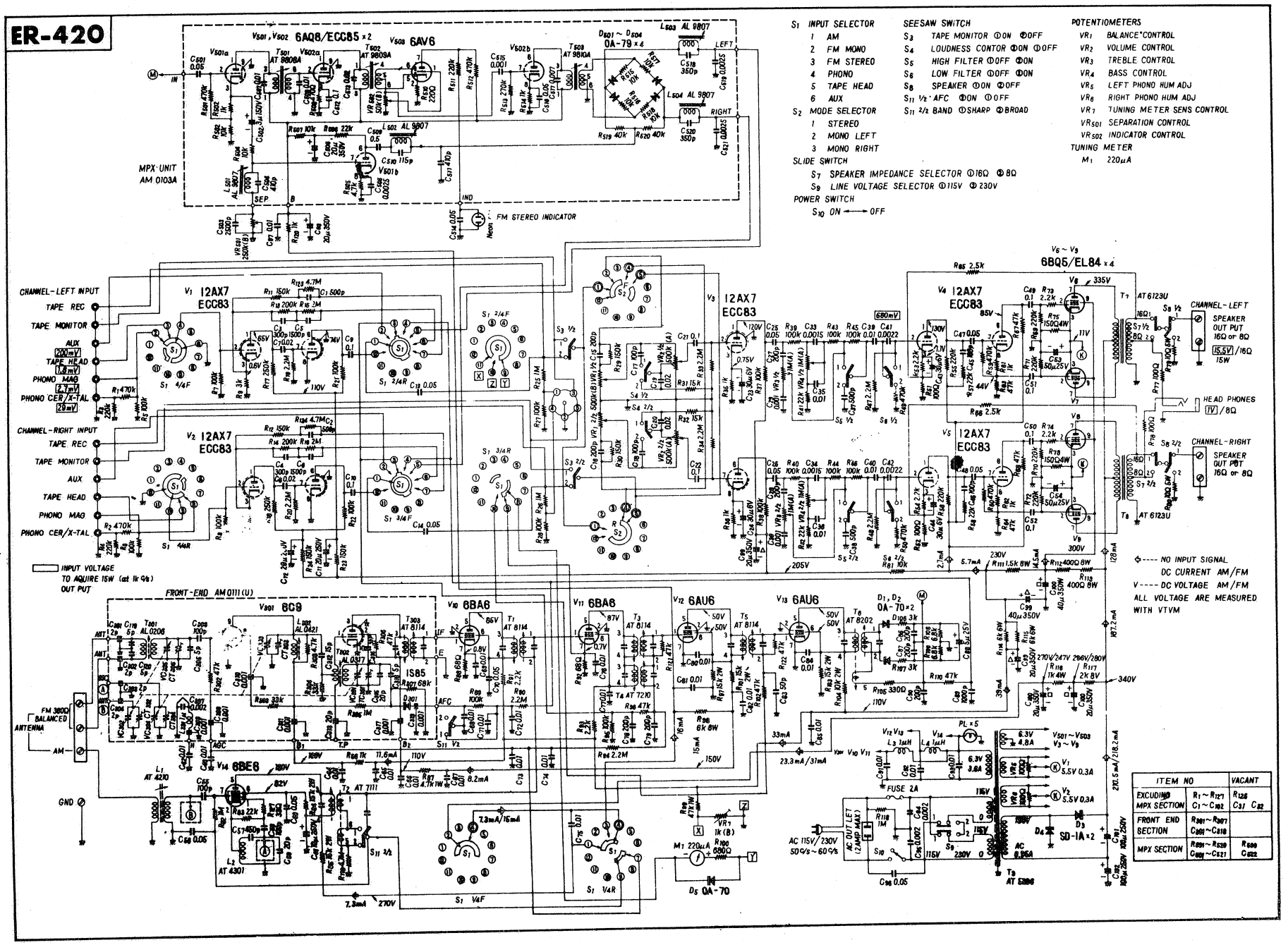

S_1 INPUT SELECTOR
- 1 AM
- 2 FM MONO
- 3 FM STEREO
- 4 PHONO
- 5 TAPE HEAD
- 6 AUX

S_2 MODE SELECTOR
- 1 STEREO
- 2 MONO LEFT
- 3 MONO RIGHT

SLIDE SWITCH
- S_7 SPEAKER IMPEDANCE SELECTOR ①16Ω ②8Ω
- S_9 LINE VOLTAGE SELECTOR ①115V ②230V

POWER SWITCH
- S_{10} ON ⟷ OFF

SEESAW SWITCH
- S_3 TAPE MONITOR ①ON ②OFF
- S_4 LOUDNESS CONTOR ②ON ①OFF
- S_5 HIGH FILTER ①OFF ②ON
- S_6 LOW FILTER ①OFF ②ON
- S_8 SPEAKER ①ON ②OFF
- S_{11} 1/2 AFC ②ON ①OFF
- S_{11} 2/2 BAND ①SHARP ②BROAD

POTENTIOMETERS
- VR_1 BALANCE*CONTROL
- VR_2 VOLUME CONTROL
- VR_3 TREBLE CONTROL
- VR_4 BASS CONTROL
- VR_5 LEFT PHONO HUM ADJ
- VR_6 RIGHT PHONO HUM ADJ
- VR_7 TUNING METER SENS CONTROL
- VR_{501} SEPARATION CONTROL
- VR_{502} INDICATOR CONTROL

TUNING METER
- M_1 220μA

ITEM NO		VACANT
EXCUDING MPX SECTION	$R_1 \sim R_{127}$ $C_1 \sim C_{182}$	R_{128} C_{37} C_{82}
FRONT END SECTION	$R_{301} \sim R_{387}$ $C_{301} \sim C_{318}$	
MPX SECTION	$R_{501} \sim R_{539}$ $C_{501} \sim C_{527}$	R_{500} C_{502}

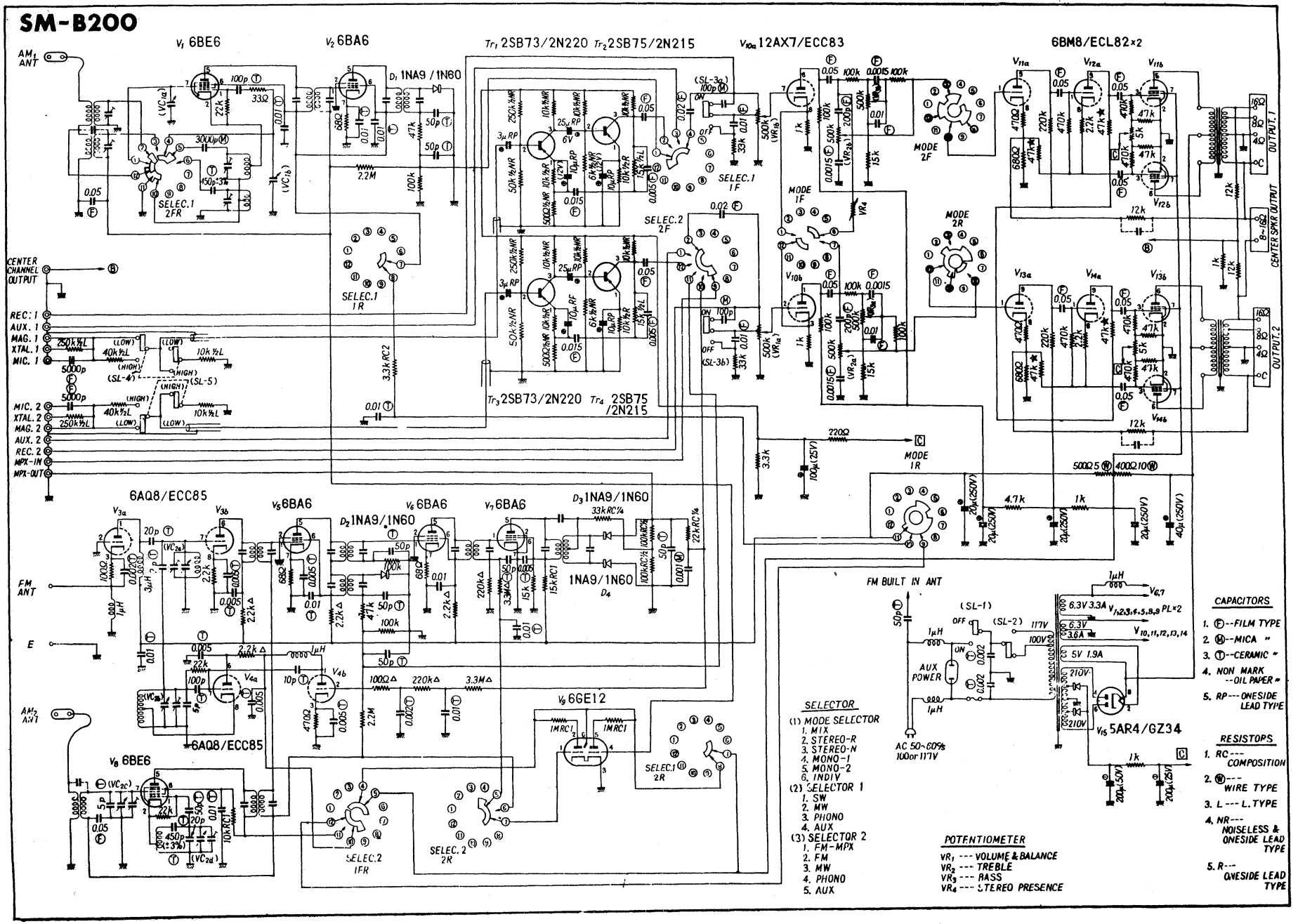
SM-B200
V1 6BE6
V2 6BA6
Tr1 2SB73/2N220 Tr2 2SB75/2N215
V10a 12AX7/ECC83
6BM8/ECL82×2
AM1 ANT
D1 1NA9 / 1N60
SELEC.1 2FR
SELEC.1 1F
SELEC.2 2F
SELEC.1 1R
MODE 2F
MODE 1F
MODE 2R
MODE 1R
CENTER CHANNEL OUTPUT
REC. 1
AUX. 1
MAG. 1
XTAL. 1
MIC. 1
MIC. 2
XTAL. 2
MAG. 2
AUX. 2
REC. 2
MPX-IN
MPX-OUT
(SL-4)
(SL-5)
Tr3 2SB73/2N220 Tr4 2SB75 /2N215
OUTPUT. 1
OUTPUT. 2
CENTER SPKR OUTPUT
6AQ8/ECC85
V5 6BA6
V6 6BA6
V7 6BA6
D3 1NA9/1N60
D2 1NA9/1N60
1NA9/1N60 D4
FM ANT
AM2 ANT
V8 6BE6
V9 6GE12
SELEC.2 1FR
SELEC.2 2R
SELEC.1 2R
FM BUILT IN ANT
(SL-1)
(SL-2)
AUX POWER
AC 50~60c/s 100or117V
V15 5AR4/GZ34
SELECTOR
(1) MODE SELECTOR
1. MIX
2. STEREO-R
3. STEREO-N
4. MONO-1
5. MONO-2
6. INDIV
(2) SELECTOR 1
1. SW
2. MW
3. PHONO
4. AUX
(3) SELECTOR 2
1. FM-MPX
2. FM
3. MW
4. PHONO
5. AUX
POTENTIOMETER
VR1 --- VOLUME & BALANCE
VR2 --- TREBLE
VR3 --- BASS
VR4 --- STEREO PRESENCE
CAPACITORS
1. (F)--FILM TYPE
2. (M)--MICA "
3. (T)--CERAMIC "
4. NON MARK --OIL PAPER "
5. RP---ONESIDE LEAD TYPE
RESISTORS
1. RC--- COMPOSITION
2. (W)--- WIRE TYPE
3. L--- L.TYPE
4. NR--- NOISELESS & ONESIDE LEAD TYPE
5. R--- ONESIDE LEAD TYPE

SM-B200A

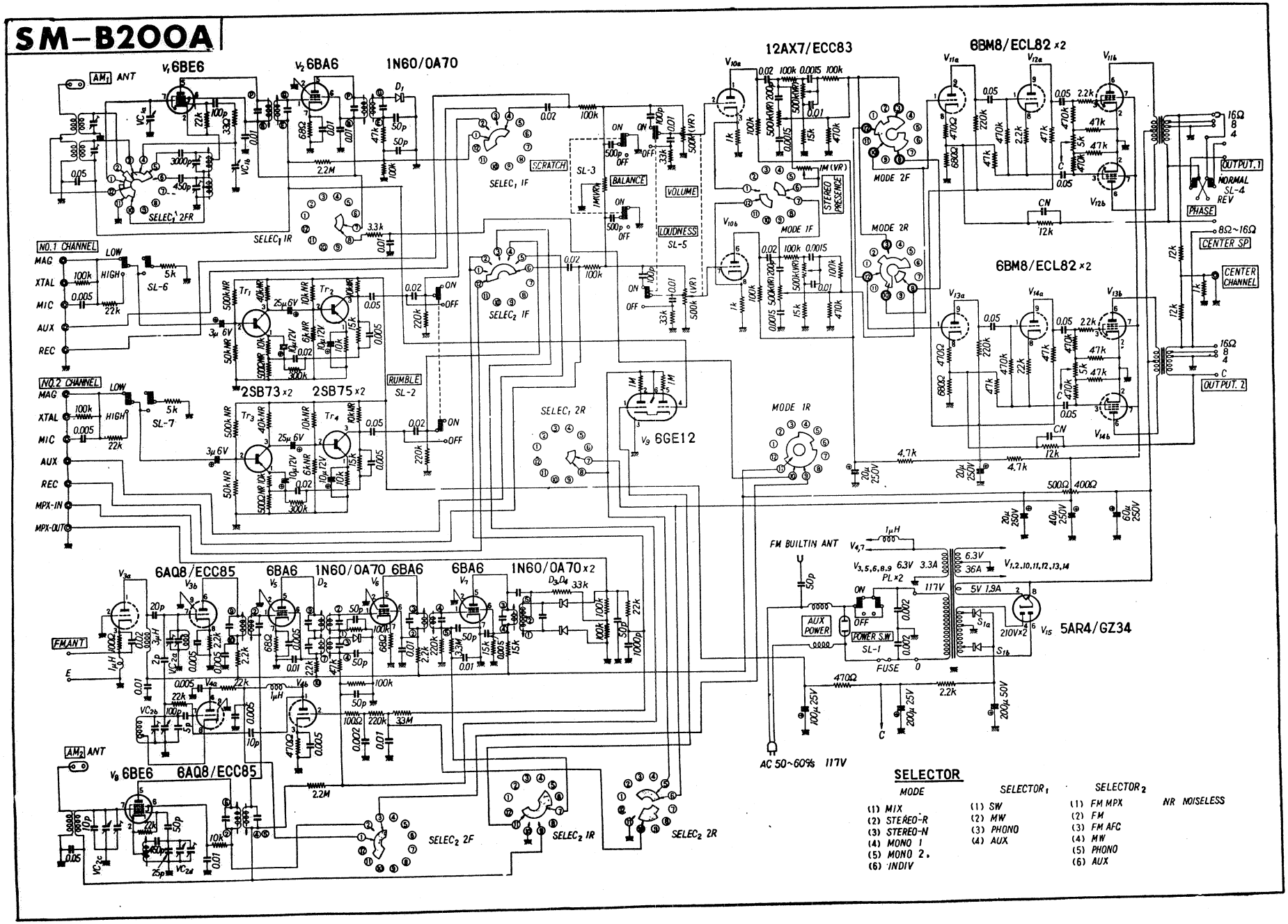
V1 6BE6
V2 6BA6
1N60/0A70
12AX7/ECC83
6BM8/ECL82 ×2
6BM8/ECL82 ×2
2SB73 ×2
2SB75 ×2
6AQ8/ECC85
6BA6
1N60/0A70 6BA6
6BA6
1N60/0A70 ×2
V8 6BE6
6AQ8/ECC85
V9 6GE12
V15 5AR4/GZ34
AM1 ANT
AM2 ANT
FM ANT
FM BUILTIN ANT
SELEC1 2FR
SELEC1 1R
SELEC1 1F
SELEC2 1F
SELEC2 2F
SELEC2 1R
SELEC2 2R
SELEC1 2R
SCRATCH
SL-3
BALANCE
VOLUME
LOUDNESS
SL-5
RUMBLE
SL-2
NO.1 CHANNEL
NO.2 CHANNEL
MAG
XTAL
MIC
AUX
REC
MPX-IN
MPX-OUT
LOW
HIGH
SL-6
SL-7
MODE 2F
MODE 2R
MODE 1F
MODE 1R
STEREO PRESENCE
PHASE
NORMAL
REV
SL-4
OUTPUT. 1
OUTPUT. 2
CENTER SP
CENTER CHANNEL
8Ω~16Ω
16Ω
8
4
C
AUX POWER
POWER S.W
SL-1
FUSE
AC 50~60% 117V
SELECTOR
MODE
(1) MIX
(2) STEREO-R
(3) STEREO-N
(4) MONO 1
(5) MONO 2.
(6) INDIV
SELECTOR1
(1) SW
(2) MW
(3) PHONO
(4) AUX
SELECTOR2
(1) FM MPX
(2) FM
(3) FM AFC
(4) MW
(5) PHONO
(6) AUX
NR NOISELESS

SM-G204.G204B

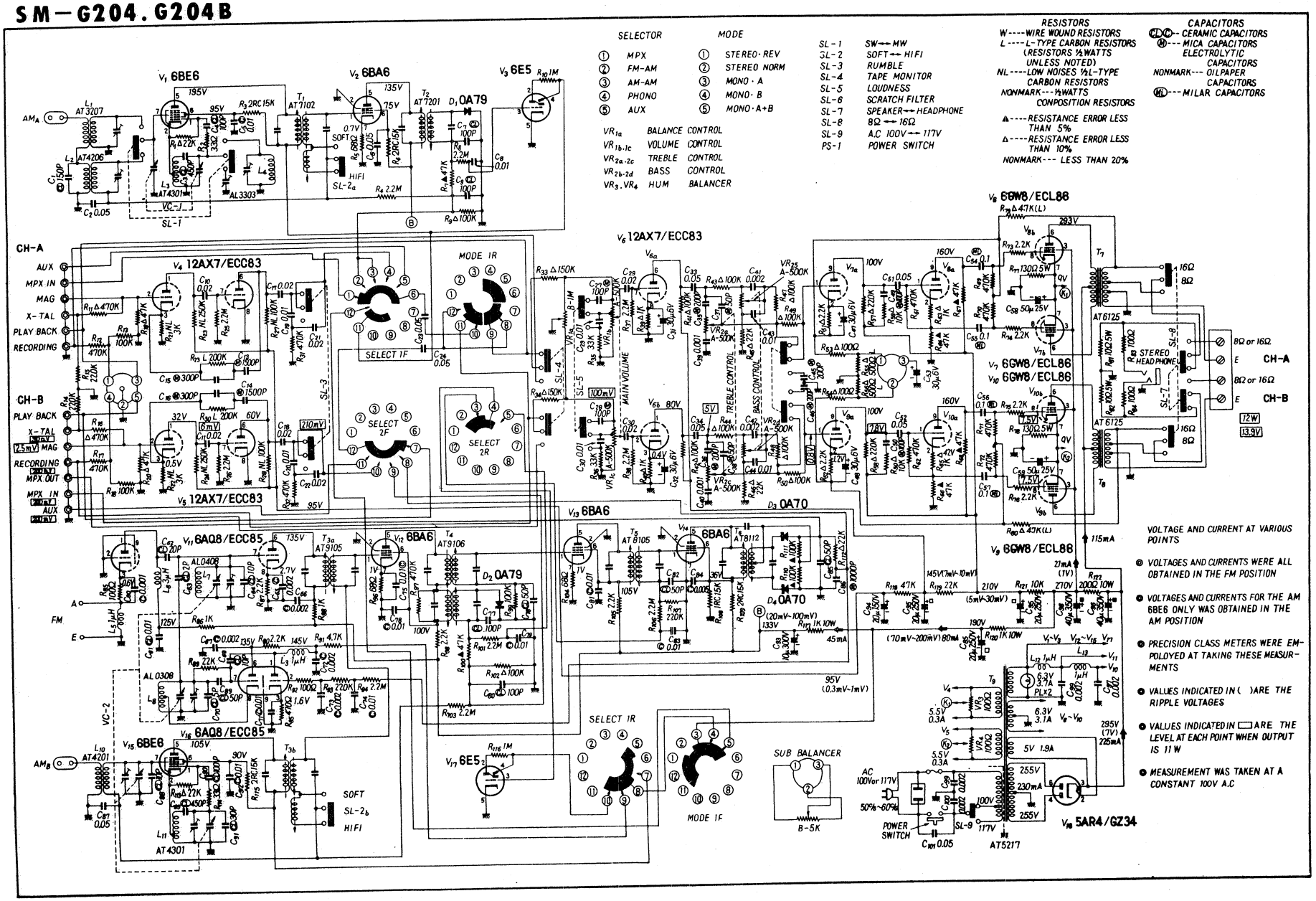

SM-Q300.Q300A.Q300B

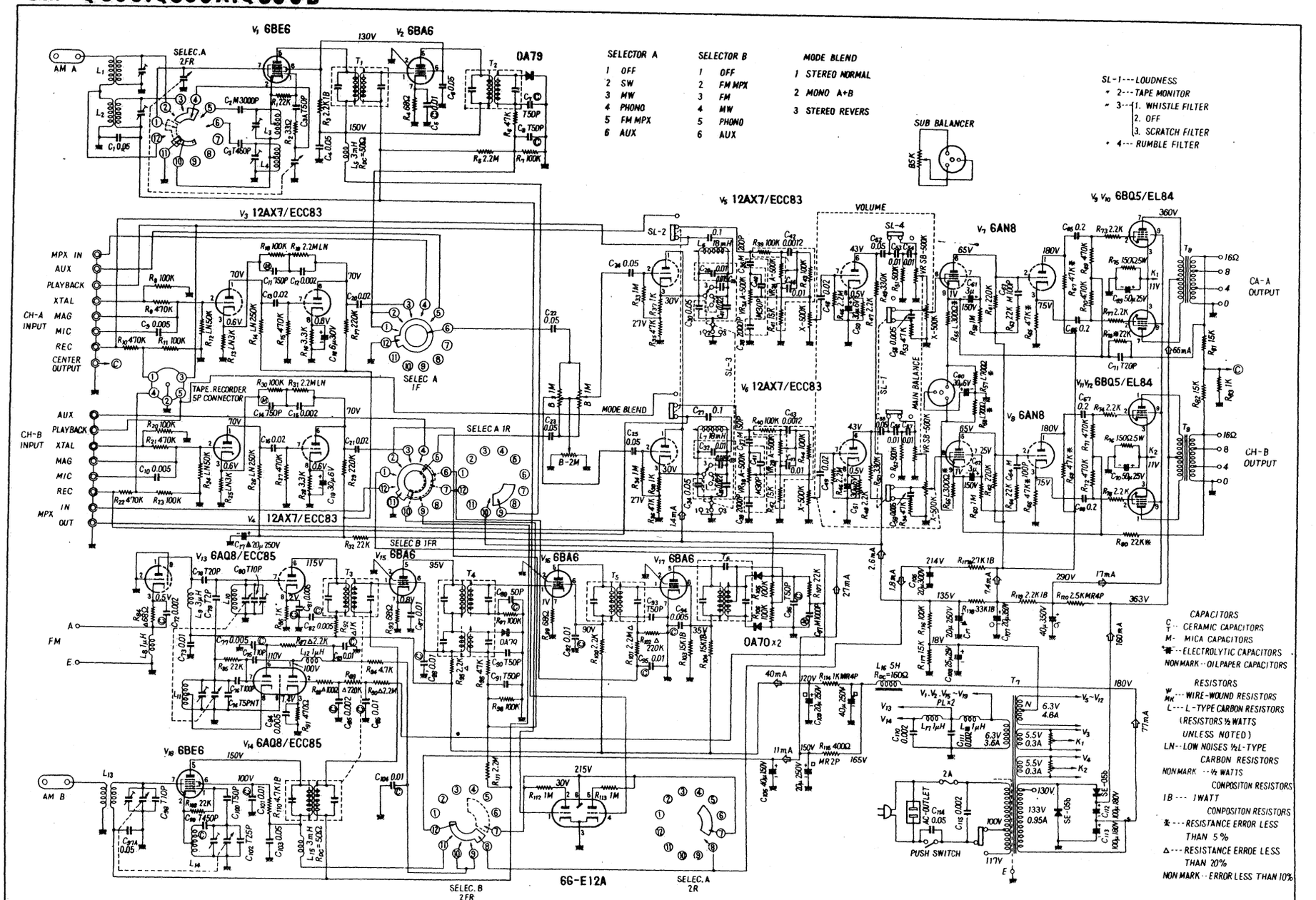

SM-600

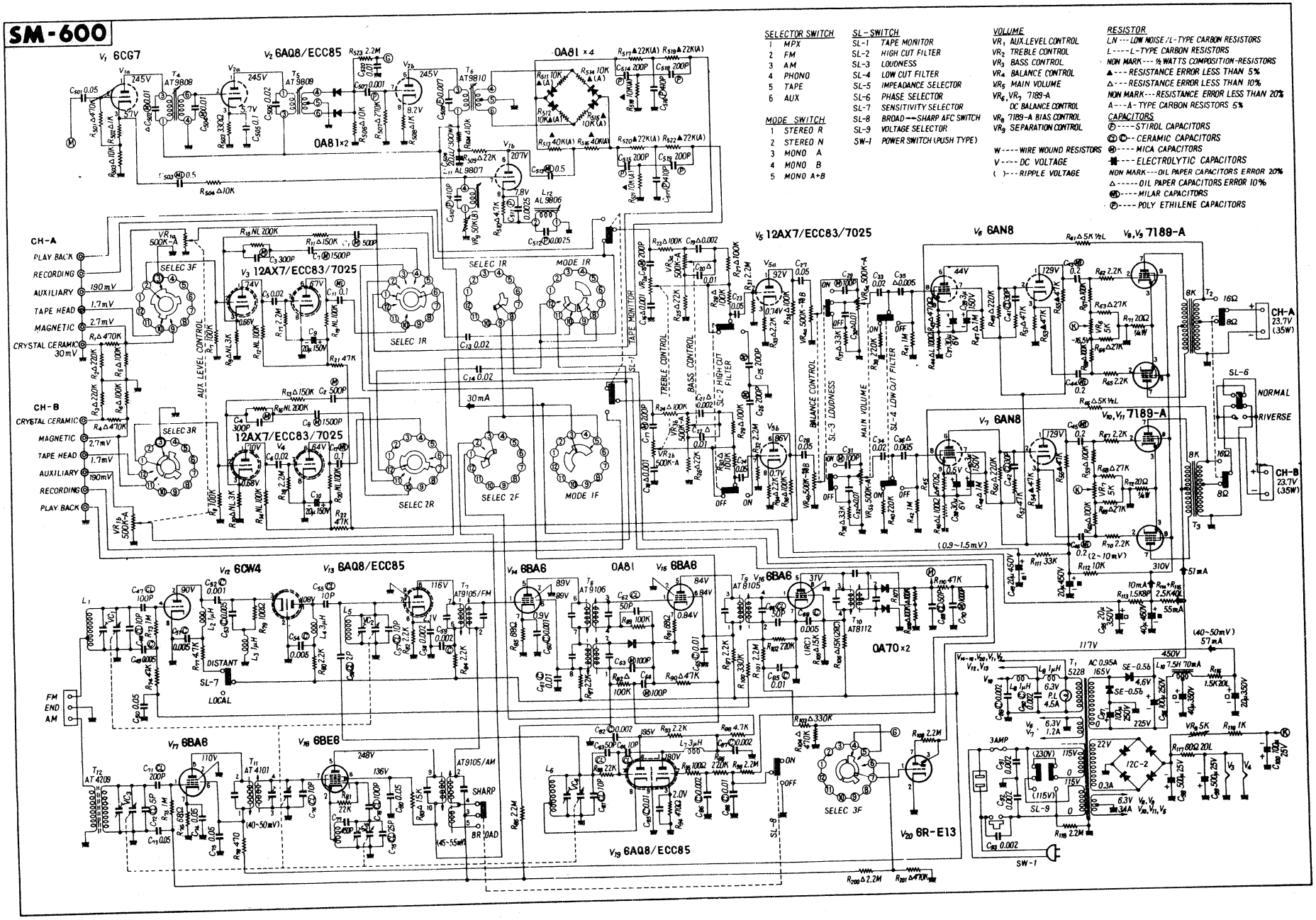

SELECTOR SWITCH	
1	MPX
2	FM
3	AM
4	PHONO
5	TAPE
6	AUX

MODE SWITCH	
1	STEREO R
2	STEREO N
3	MONO A
4	MONO B
5	MONO A+B

SL-SWITCH	
SL-1	TAPE MONITOR
SL-2	HIGH CUT FILTER
SL-3	LOUDNESS
SL-4	LOW CUT FILTER
SL-5	IMPEADANCE SELECTOR
SL-6	PHASE SELECTOR
SL-7	SENSITIVITY SELECTOR
SL-8	BROAD→SHARP AFC SWITCH
SL-9	VOLTAGE SELECTOR
SW-1	POWER SWITCH (PUSH TYPE)

VOLUME	
VR_1	AUX.LEVEL CONTROL
VR_2	TREBLE CONTROL
VR_3	BASS CONTROL
VR_4	BALANCE CONTROL
VR_5	MAIN VOLUME
VR_6, VR_7	7189-A DC BALANCE CONTROL
VR_8	7189-A BIAS CONTROL
VR_9	SEPARATION CONTROL

W----WIRE WOUND RESISTORS
V----DC VOLTAGE
( )---RIPPLE VOLTAGE

RESISTOR
LN---LOW NOISE/L-TYPE CARBON RESISTORS
L----L-TYPE CARBON RESISTORS
NON MARK---½ WATTS COMPOSITION-RESISTORS
▲---RESISTANCE ERROR LESS THAN 5%
△---RESISTANCE ERROR LESS THAN 10%
NON MARK---RESISTANCE ERROR LESS THAN 20%
A---A-TYPE CARBON RESISTORS 5%

CAPACITORS
Ⓟ----STIROL CAPACITORS
Ⓒ Ⓒ---CERAMIC CAPACITORS
Ⓜ----MICA CAPACITORS
▮----ELECTROLYTIC CAPACITORS
NON MARK---OIL PAPER CAPACITORS ERROR 20%
△-----OIL PAPER CAPACITORS ERROR 10%
Ⓜ----MILAR CAPACITORS
Ⓟ----POLY ETHILENE CAPACITORS

SX-34

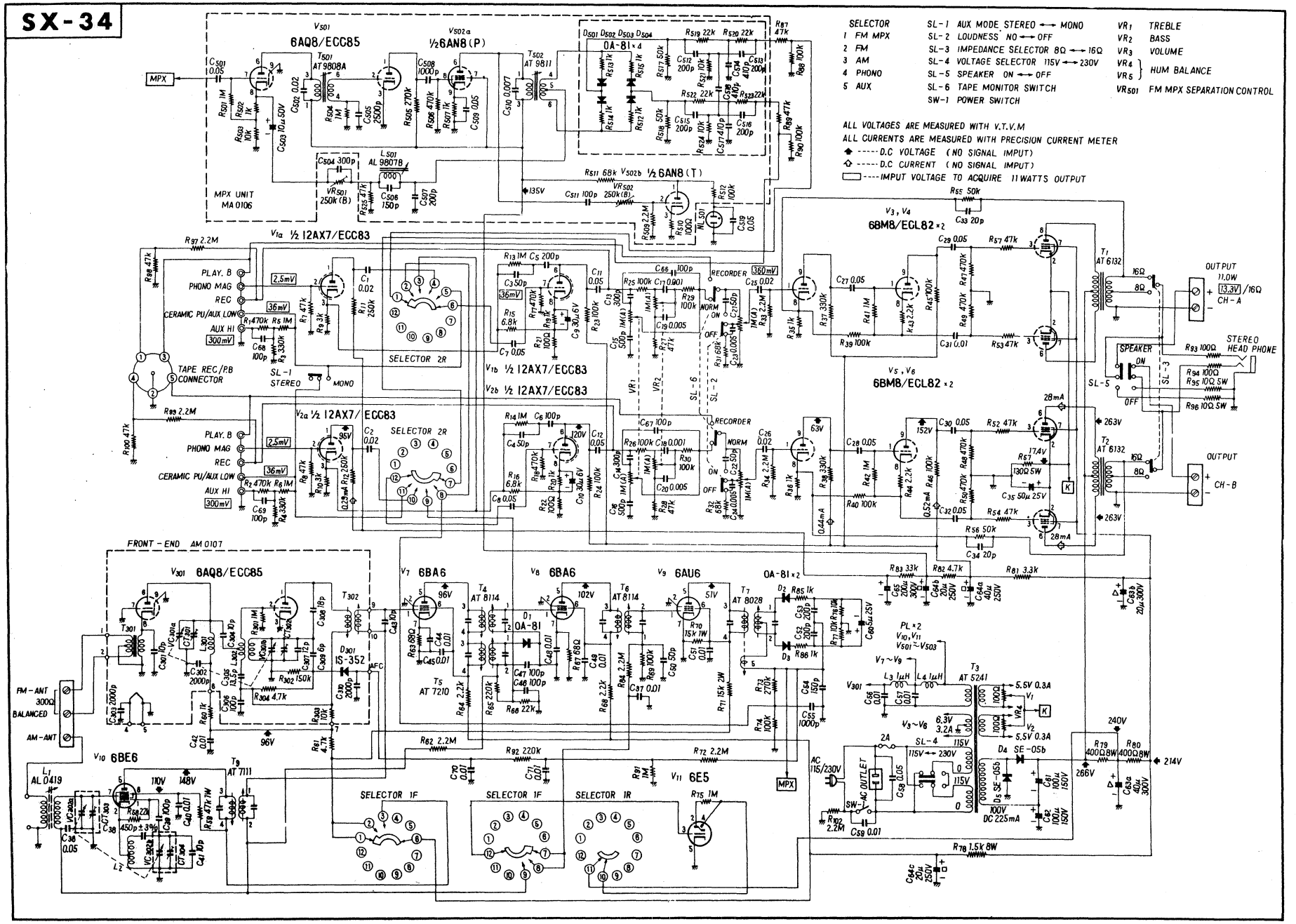
SELECTOR
1 FM MPX
2 FM
3 AM
4 PHONO
5 AUX
SL-1 AUX MODE STEREO ⟷ MONO
SL-2 LOUDNESS NO ⟷ OFF
SL-3 IMPEDANCE SELECTOR 8Ω ⟷ 16Ω
SL-4 VOLTAGE SELECTOR 115V ⟷ 230V
SL-5 SPEAKER ON ⟷ OFF
SL-6 TAPE MONITOR SWITCH
SW-1 POWER SWITCH
VR1 TREBLE
VR2 BASS
VR3 VOLUME
VR4 VR5 HUM BALANCE
VR501 FM MPX SEPARATION CONTROL
ALL VOLTAGES ARE MEASURED WITH V.T.V.M
ALL CURRENTS ARE MEASURED WITH PRECISION CURRENT METER
D.C VOLTAGE (NO SIGNAL IMPUT)
D.C CURRENT (NO SIGNAL IMPUT)
IMPUT VOLTAGE TO ACQUIRE 11 WATTS OUTPUT
MPX UNIT MA 0106
FRONT-END AM 0107
SELECTOR 2R
SELECTOR 1F
SELECTOR 1R
TAPE REC/P.B CONNECTOR
OUTPUT 11.0W
STEREO HEAD PHONE
FM-ANT 300Ω BALANCED
AM-ANT
AC OUTLET
AC 115/230V

Model SX-34B, SX-34Bk

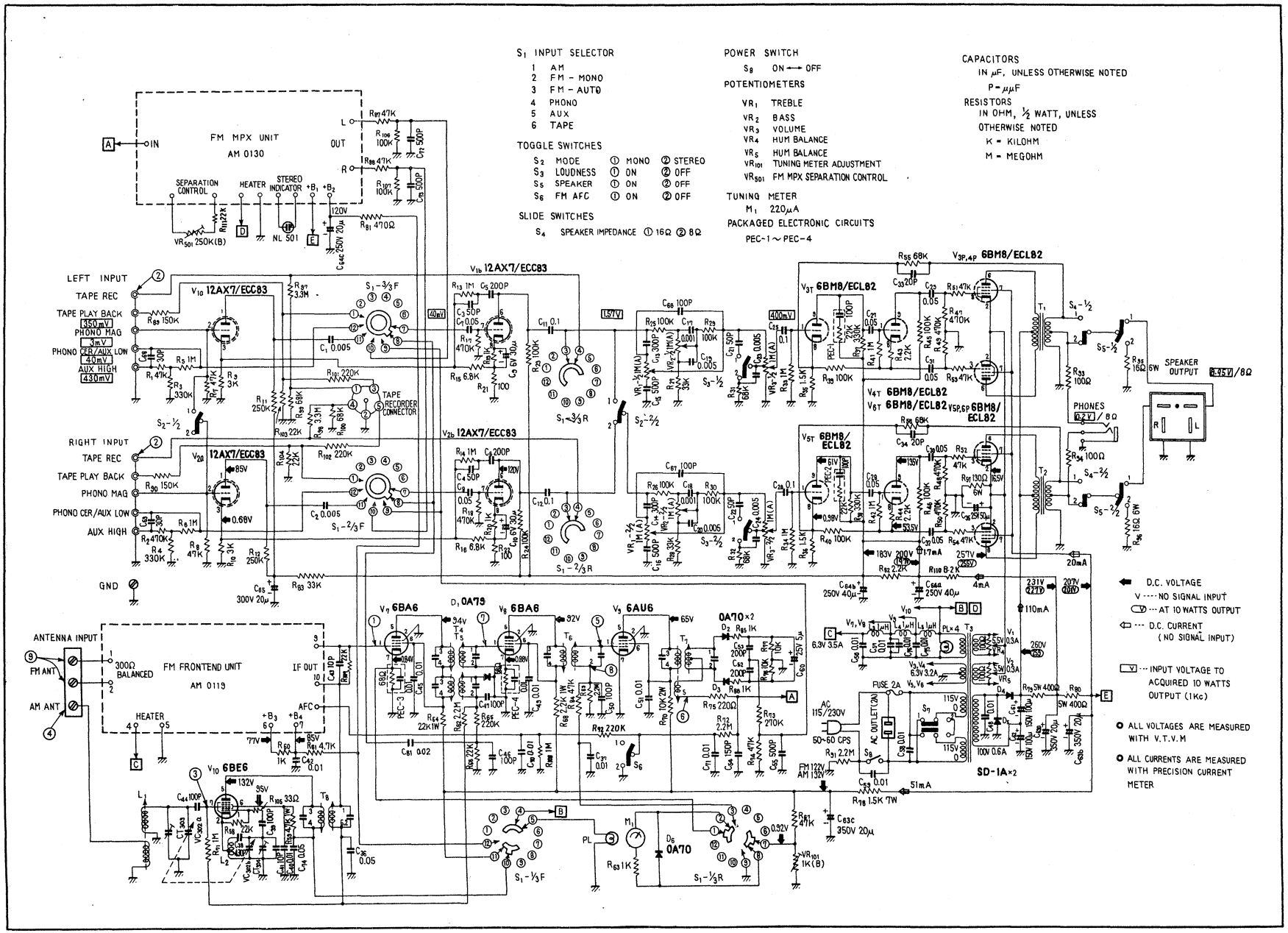

SX-40

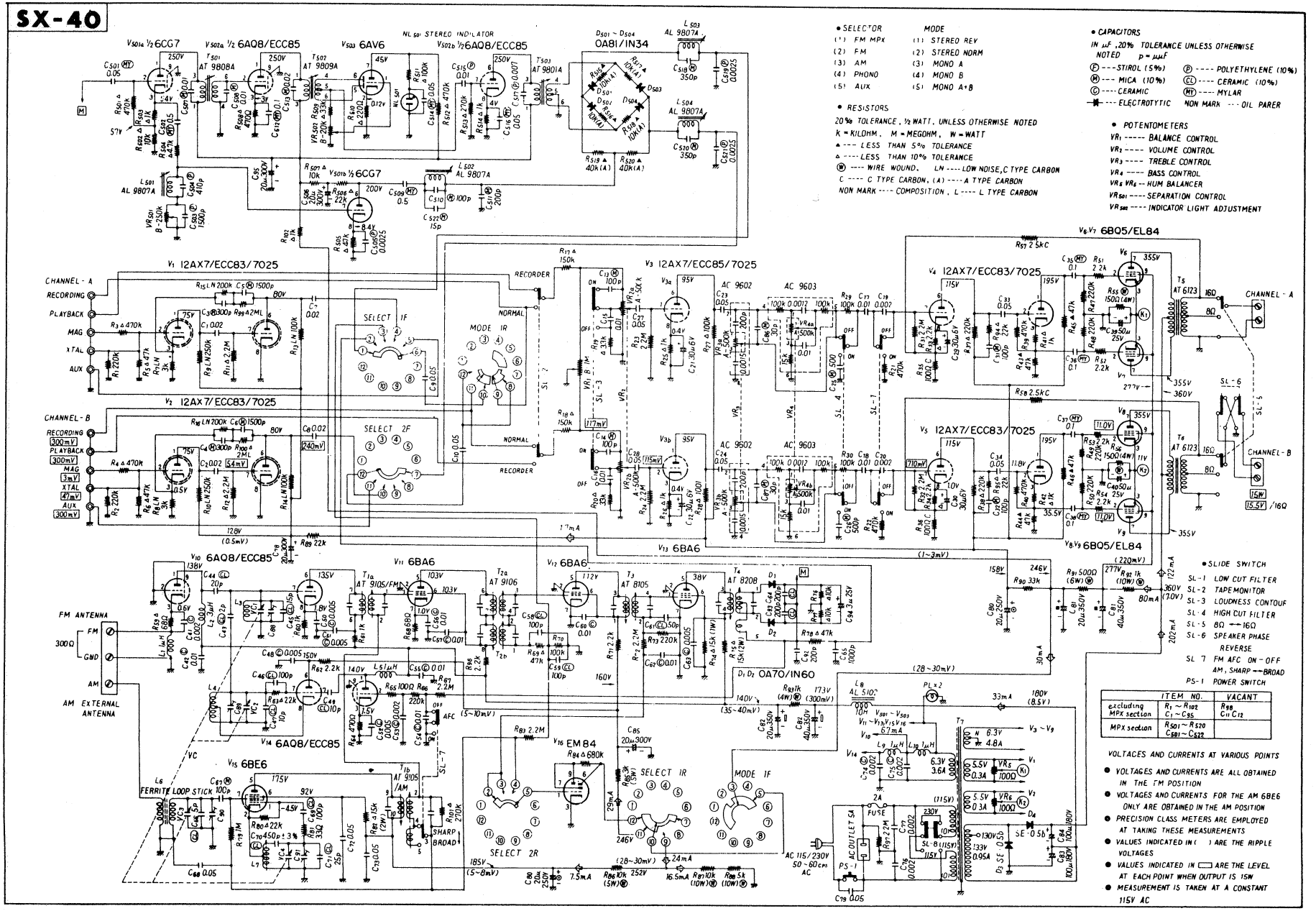

- SELECTOR

	MODE
(1)	FM MPX
(2)	FM
(3)	AM
(4)	PHONO
(5)	AUX

	MODE
(1)	STEREO REV
(2)	STEREO NORM
(3)	MONO A
(4)	MONO B
(5)	MONO A+B

- RESISTORS

20% TOLERANCE, ½ WATT, UNLESS OTHERWISE NOTED
K = KILOHM, M = MEGOHM, W = WATT
▲ --- LESS THAN 5% TOLERANCE
△ ---- LESS THAN 10% TOLERANCE
(W) ---- WIRE WOUND, LN ---- LOW NOISE, C TYPE CARBON
C ---- C TYPE CARBON, (A) ---- A TYPE CARBON
NON MARK ---- COMPOSITION, L ---- L TYPE CARBON

- CAPACITORS

IN μF, 20% TOLERANCE UNLESS OTHERWISE NOTED p = μμF

(P) ---STIROL (5%)
(M) --- MICA (10%)
(C) ----CERAMIC
(P) ---- POLYETHYLENE (10%)
(CL) ---- CERAMIC (10%)
(MY) ---- MYLAR
NON MARK --- OIL PARER

- POTENTIOMETERS

VR1 ----- BALANCE CONTROL
VR2 ---- VOLUME CONTROL
VR3 ---- TREBLE CONTROL
VR4 ---- BASS CONTROL
VR5 VR6 -- HUM BALANCER
VR501 ---- SEPARATION CONTROL
VR502 ---- INDICATOR LIGHT ADJUSTMENT

- SLIDE SWITCH

SL-1 LOW CUT FILTER
SL-2 TAPE MONITOR
SL-3 LOUDNESS CONTOUR
SL-4 HIGH CUT FILTER
SL-5 8Ω ⟷ 16Ω
SL-6 SPEAKER PHASE REVERSE
SL-7 FM AFC ON-OFF
AM, SHARP ⟷ BROAD
PS-1 POWER SWITCH

ITEM NO.		VACANT
excluding MPX section	$R_1 \sim R_{102}$, $C_1 \sim C_{95}$	R_{88}, C_{11} C_{12}
MPX section	$R_{501} \sim R_{520}$, $C_{501} \sim C_{522}$	

VOLTAGES AND CURRENTS AT VARIOUS POINTS

- VOLTAGES AND CURRENTS ARE ALL OBTAINED IN THE FM POSITION
- VOLTAGES AND CURRENTS FOR THE AM 6BE6 ONLY ARE OBTAINED IN THE AM POSITION
- PRECISION CLASS METERS ARE EMPLOYED AT TAKING THESE MEASUREMENTS
- VALUES INDICATED IN ( ) ARE THE RIPPLE VOLTAGES
- VALUES INDICATED IN ▭ ARE THE LEVEL AT EACH POINT WHEN OUTPUT IS 15W
- MEASUREMENT IS TAKEN AT A CONSTANT 115V AC

Weitere Unterlagen leider nicht vorhanden

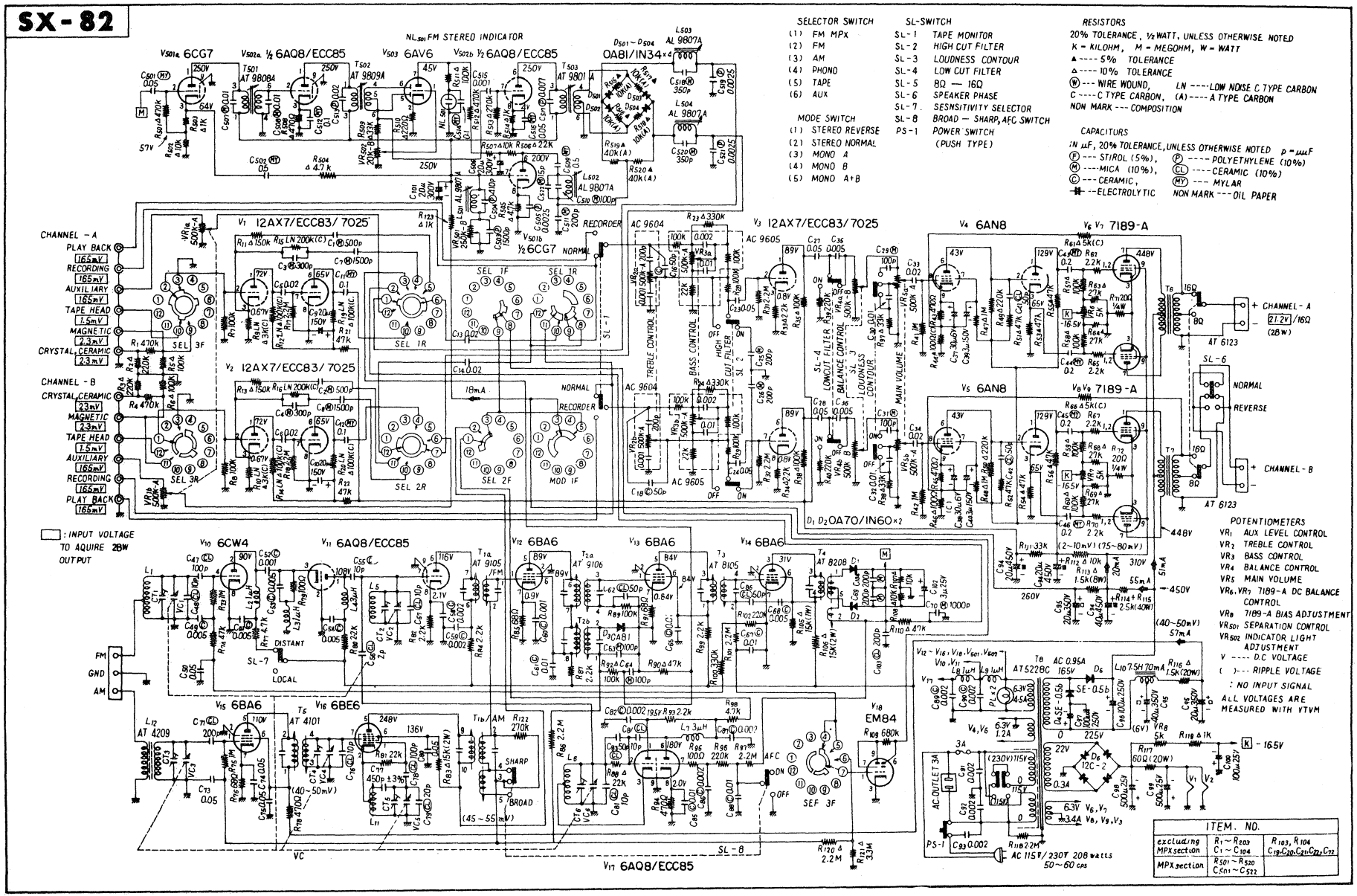

SX-82E

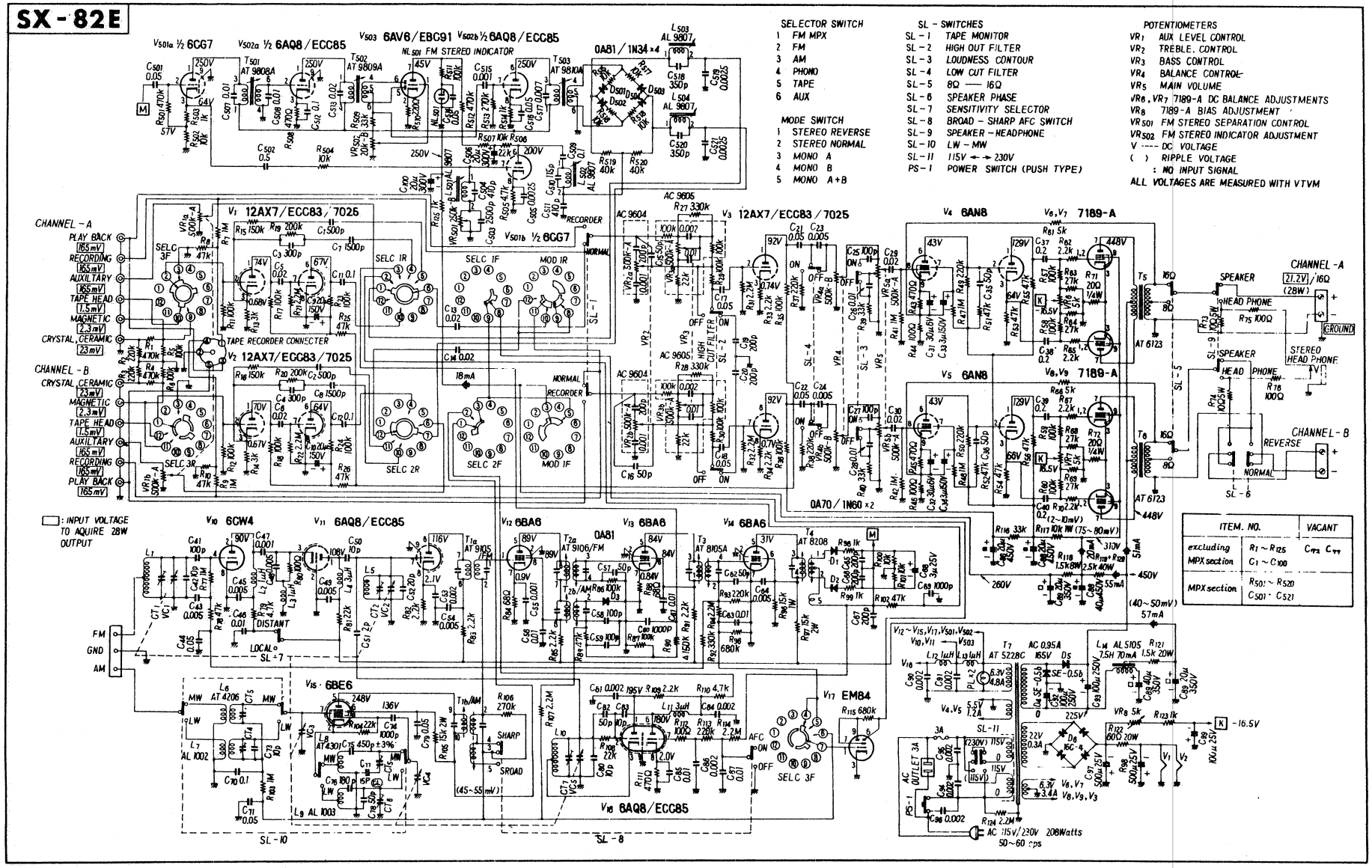
SELECTOR SWITCH
1 FM MPX
2 FM
3 AM
4 PHONO
5 TAPE
6 AUX
MODE SWITCH
1 STEREO REVERSE
2 STEREO NORMAL
3 MONO A
4 MONO B
5 MONO A+B
SL - SWITCHES
SL-1 TAPE MONITOR
SL-2 HIGH OUT FILTER
SL-3 LOUDNESS CONTOUR
SL-4 LOW CUT FILTER
SL-5 8Ω — 16Ω
SL-6 SPEAKER PHASE
SL-7 SENSITIVITY SELECTOR
SL-8 BROAD - SHARP AFC SWITCH
SL-9 SPEAKER - HEADPHONE
SL-10 LW - MW
SL-11 115V ↔ 230V
PS-1 POWER SWITCH (PUSH TYPE)
POTENTIOMETERS
VR1 AUX LEVEL CONTROL
VR2 TREBLE. CONTROL
VR3 BASS CONTROL
VR4 BALANCE CONTROL
VR5 MAIN VOLUME
VR6, VR7 7189-A DC BALANCE ADJUSTMENTS
VR8 7189-A BIAS ADJUSTMENT
VR501 FM STEREO SEPARATION CONTROL
VR502 FM STEREO INDICATOR ADJUSTMENT
V ---- DC VOLTAGE
( ) RIPPLE VOLTAGE
: NO INPUT SIGNAL
ALL VOLTAGES ARE MEASURED WITH VTVM
CHANNEL - A
PLAY BACK
RECORDING
AUXILIARY
TAPE HEAD
MAGNETIC
CRYSTAL, CERAMIC
CHANNEL - B
TAPE RECORDER CONNECTER
: INPUT VOLTAGE TO AQUIRE 28W OUTPUT
FM
GND
AM
V1 12AX7/ECC83/7025
V2 12AX7/ECC83/7025
V3 12AX7/ECC83/7025
V4 6AN8
V5 6AN8
V6,V7 7189-A
V8,V9 7189-A
V10 6CW4
V11 6AQ8/ECC85
V12 6BA6
V13 6BA6
V14 6BA6
V15 6BE6
V16 6AQ8/ECC85
V17 EM84
V501a ½ 6CG7
V501b ½ 6CG7
V502a ½ 6AQ8/ECC85
V502b ½ 6AQ8/ECC85
V503 6AV8/EBC91
NL501 FM STEREO INDICATOR
0A81/1N34 ×4
0A70/1N60 ×2
SELC 1F
SELC 2F
SELC 3F
SELC 1R
SELC 2R
SELC 3R
MOD 1F
MOD 1R
SPEAKER
HEAD PHONE
STEREO HEAD PHONE
REVERSE
NORMAL
GROUND
AT 6723
AC OUTLET 3A
AC 115V/230V 208Watts
50~60 cps
ITEM. NO. | VACANT
excluding MPX section | R1~R125 C1~C100 | C72 C77
MPX section | R501~R520 C501~C521

SX-800

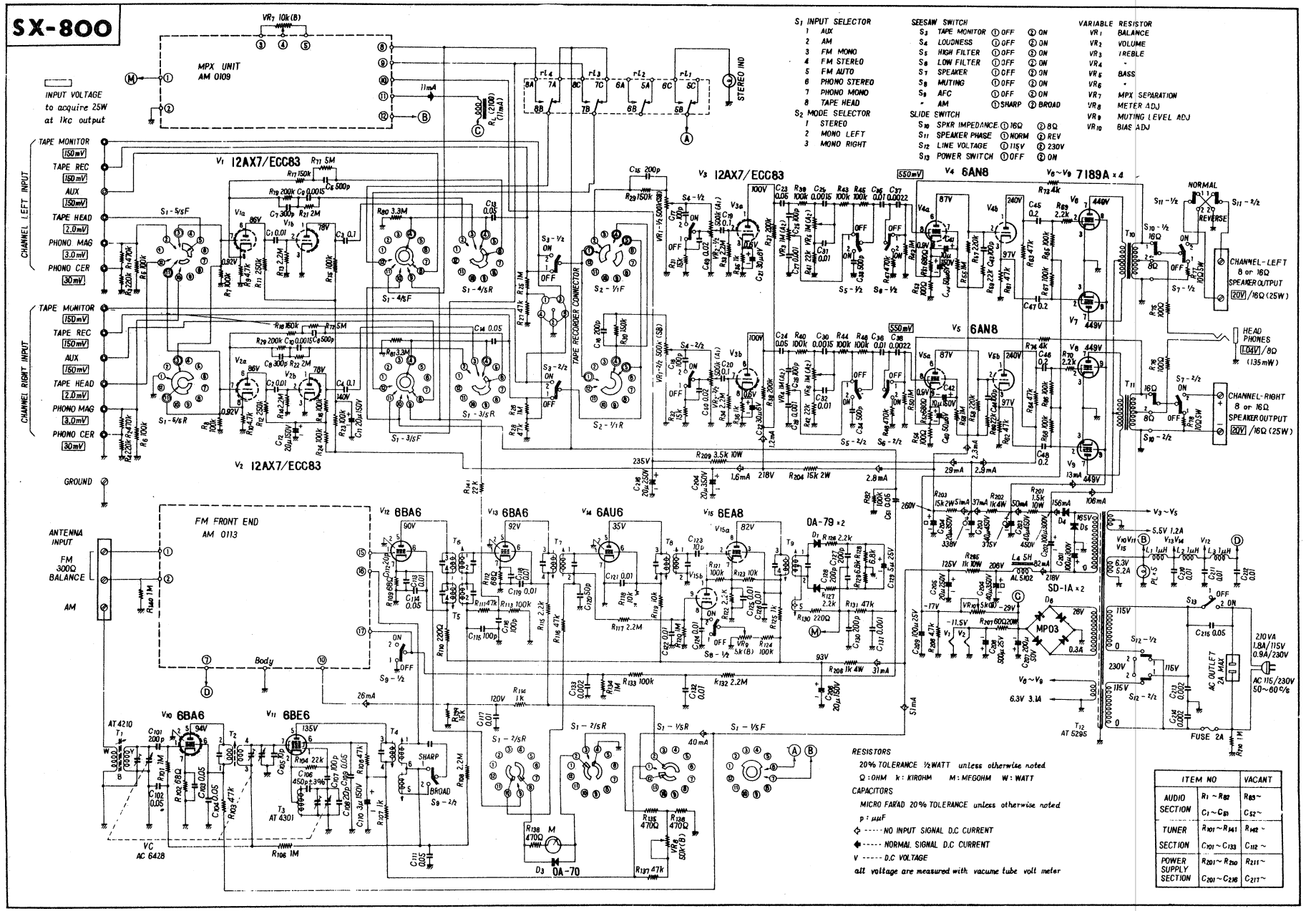

S_1 INPUT SELECTOR
1 AUX
2 AM
3 FM MONO
4 FM STEREO
5 FM AUTO
6 PHONO STEREO
7 PHONO MONO
8 TAPE HEAD

S_2 MODE SELECTOR
1 STEREO
2 MONO LEFT
3 MONO RIGHT

SEESAW SWITCH
S_3 TAPE MONITOR ① OFF ② ON
S_4 LOUDNESS ① OFF ② ON
S_5 HIGH FILTER ① OFF ② ON
S_6 LOW FILTER ① OFF ② ON
S_7 SPEAKER ① OFF ② ON
S_8 MUTING ① OFF ② ON
S_9 AFC ① OFF ② ON
" AM ① SHARP ② BROAD

SLIDE SWITCH
S_{10} SPKR IMPEDANCE ① 16Ω ② 8Ω
S_{11} SPEAKER PHASE ① NORM ② REV
S_{12} LINE VOLTAGE ① 115V ② 230V
S_{13} POWER SWITCH ① OFF ② ON

VARIABLE RESISTOR
VR_1 BALANCE
VR_2 VOLUME
VR_3 TREBLE
VR_4 -
VR_5 BASS
VR_6 -
VR_7 MPX SEPARATION
VR_8 METER ADJ
VR_9 MUTING LEVEL ADJ
VR_{10} BIAS ADJ

RESISTORS
20% TOLERANCE ½WATT unless otherwise noted
Ω : OHM k : KIROHM M : MEGOHM W : WATT

CAPACITORS
MICRO FARAD 20% TOLERANCE unless otherwise noted
p : μμF

⇨ ----- NO INPUT SIGNAL D.C CURRENT
⬅ ----- NORMAL SIGNAL D.C CURRENT
V ----- D.C VOLTAGE
all voltage are measured with vacume tube volt meter

ITEM NO		VACANT
AUDIO SECTION	R_1 ~ R_{82}	R_{83} ~
	C_1 ~ C_{51}	C_{52} ~
TUNER SECTION	R_{101} ~ R_{141}	R_{142} ~
	C_{101} ~ C_{133}	C_{112} ~
POWER SUPPLY SECTION	R_{201} ~ R_{210}	R_{211} ~
	C_{201} ~ C_{216}	C_{217} ~

Model SX-800A, SX-2000

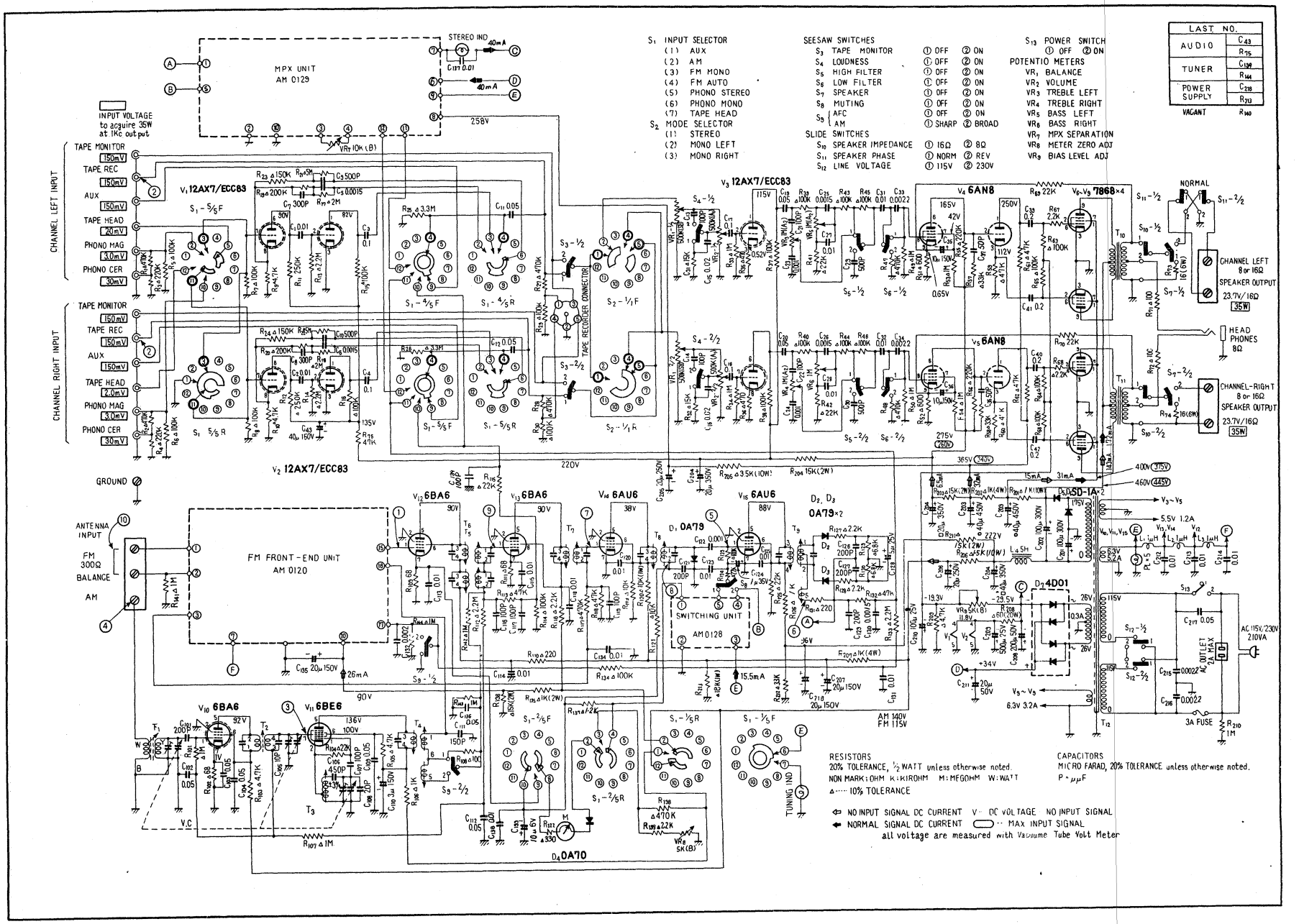

FM FRONTEND AM0127

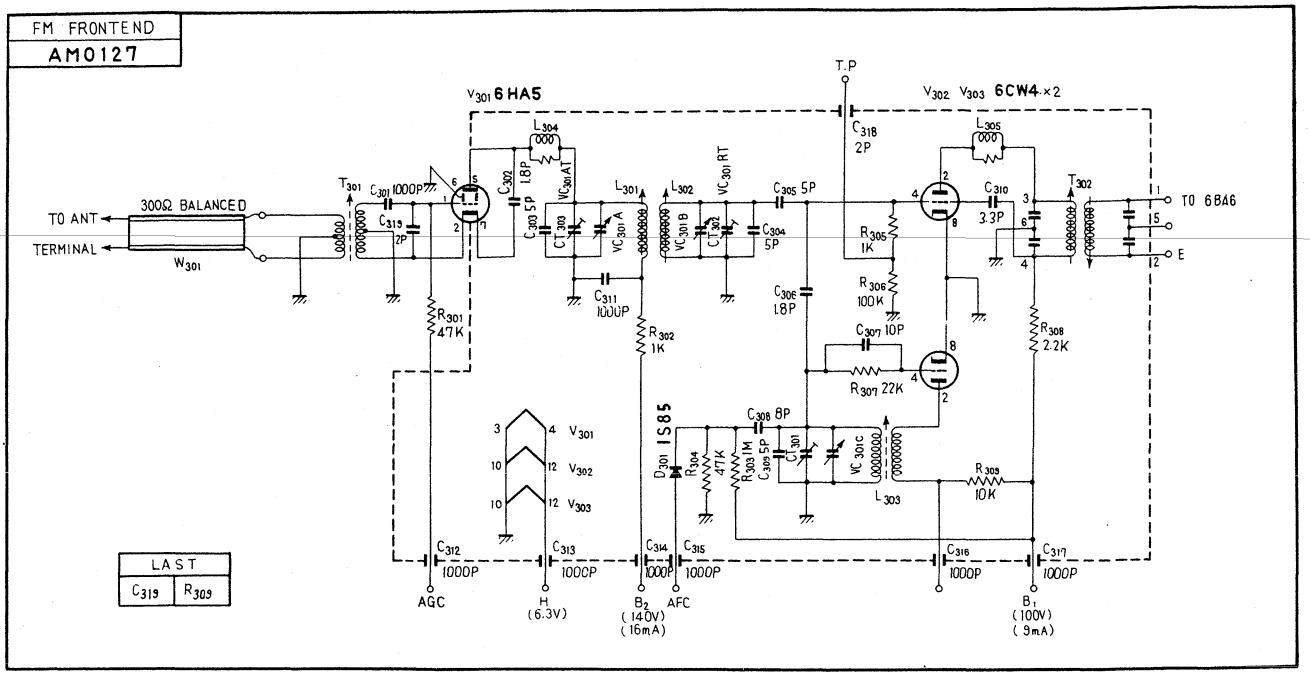

MPX UNIT AM0157

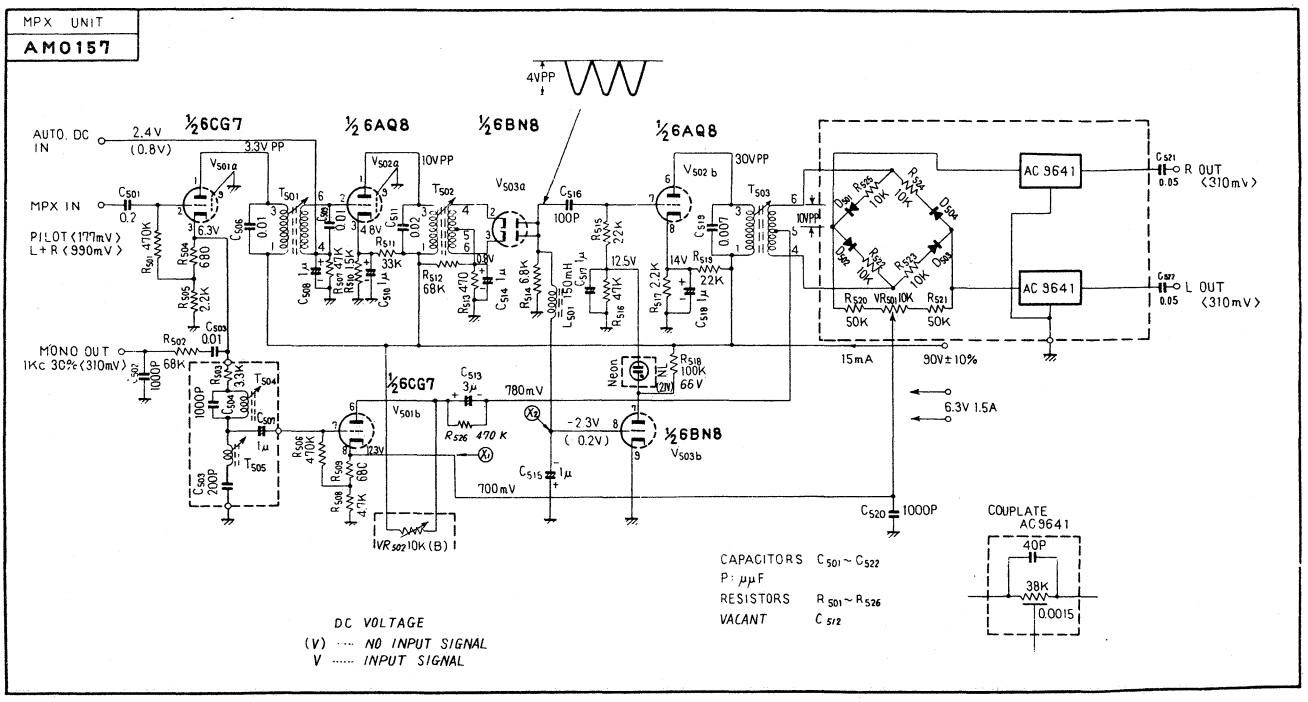

Model SX-300T

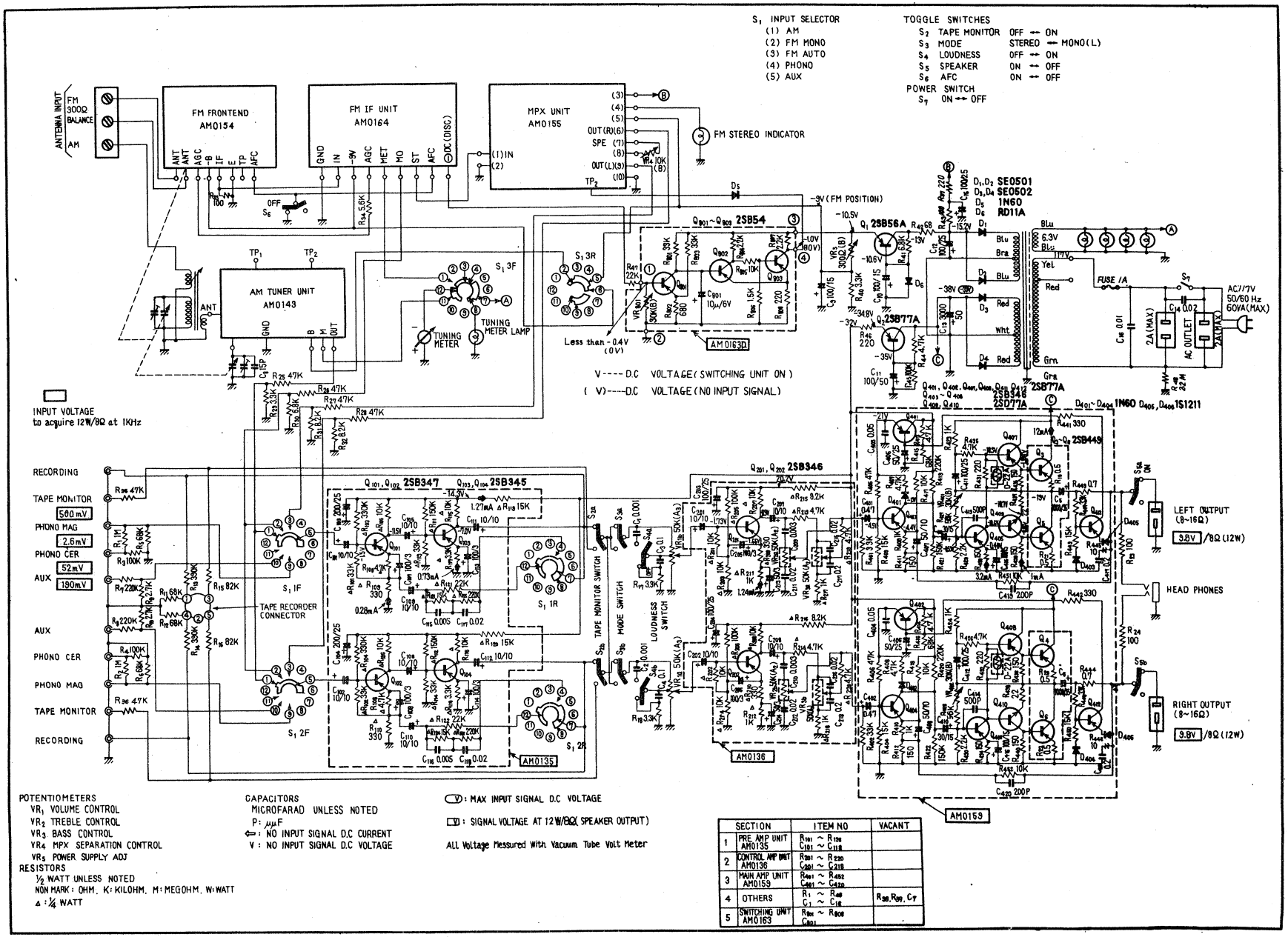

	SECTION	ITEM NO	VACANT
1	PRE AMP UNIT AM0135	R_{101} ~ R_{128} C_{101} ~ C_{118}	
2	CONTROL AMP UNIT AM0136	R_{201} ~ R_{230} C_{201} ~ C_{218}	
3	MAIN AMP UNIT AM0159	R_{401} ~ R_{452} C_{401} ~ C_{420}	
4	OTHERS	R_1 ~ R_{48} C_1 ~ C_{18}	R_{38}, R_{39}, C_7
5	SWITCHING UNIT AM0163	R_{901} ~ R_{908} C_{901}	

AM TUNER UNIT AM0143

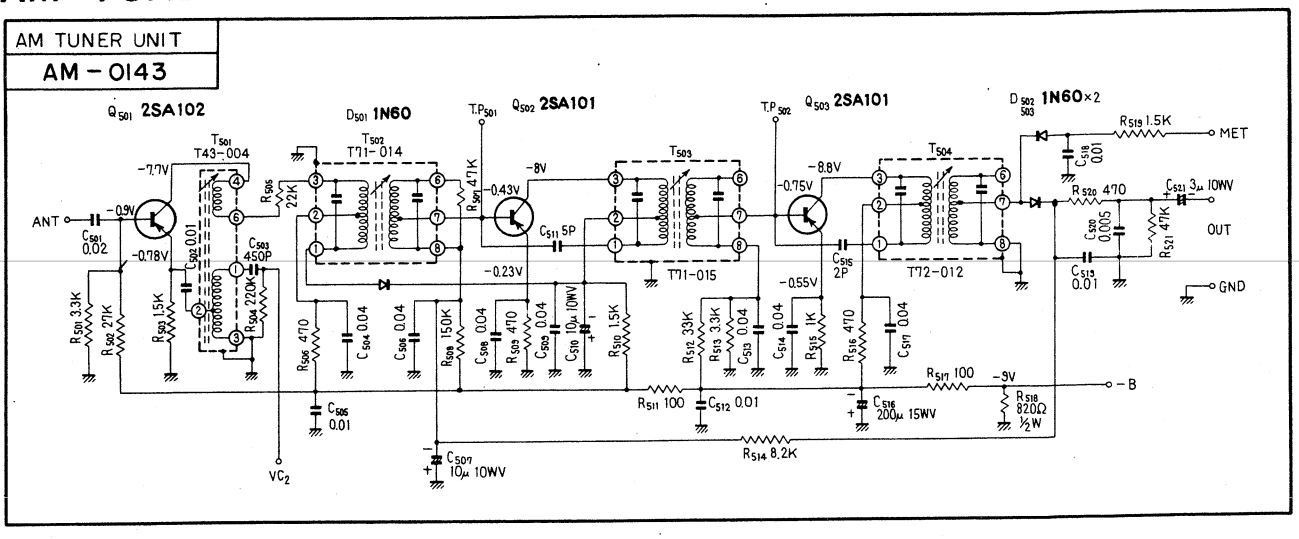

FM FRONTEND AM0154

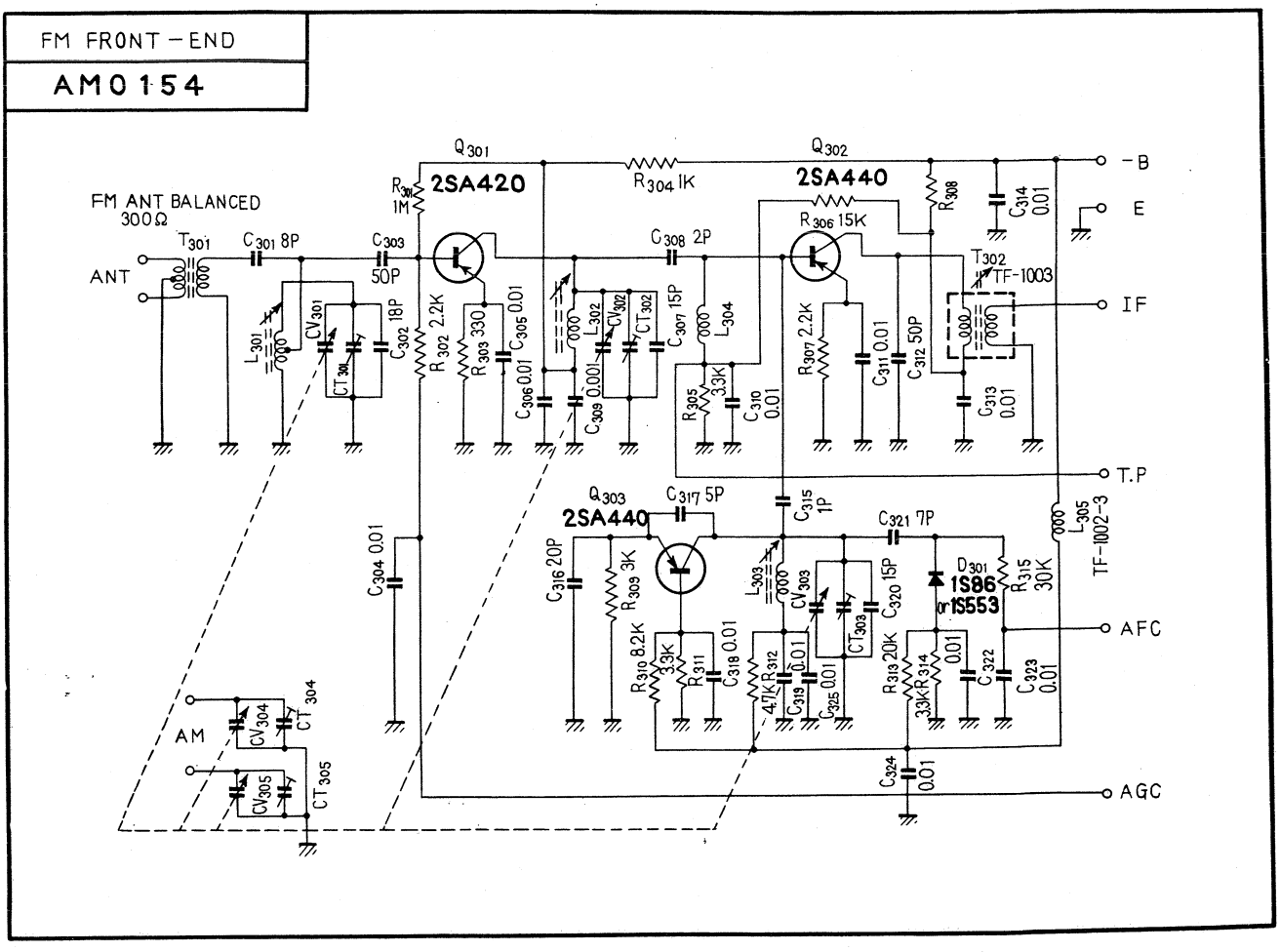

FM IF UNIT AM0164

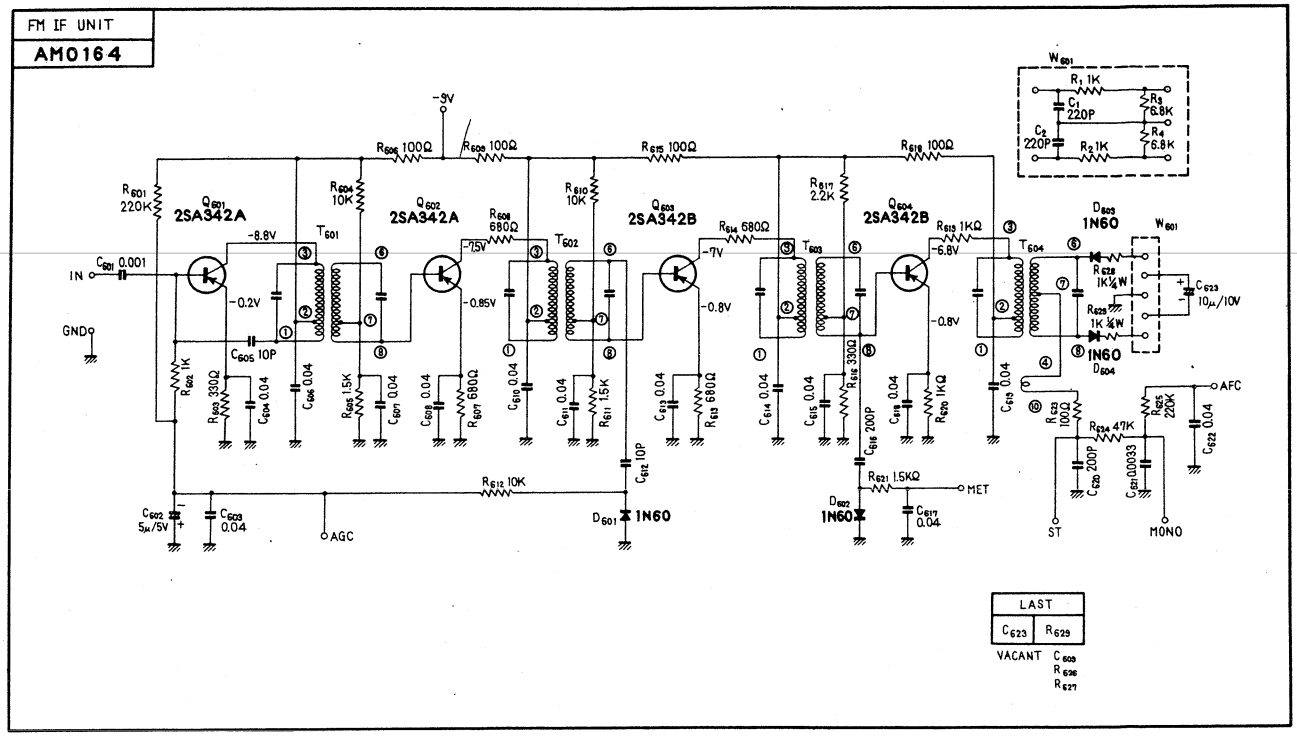

MPX UNIT AM0155

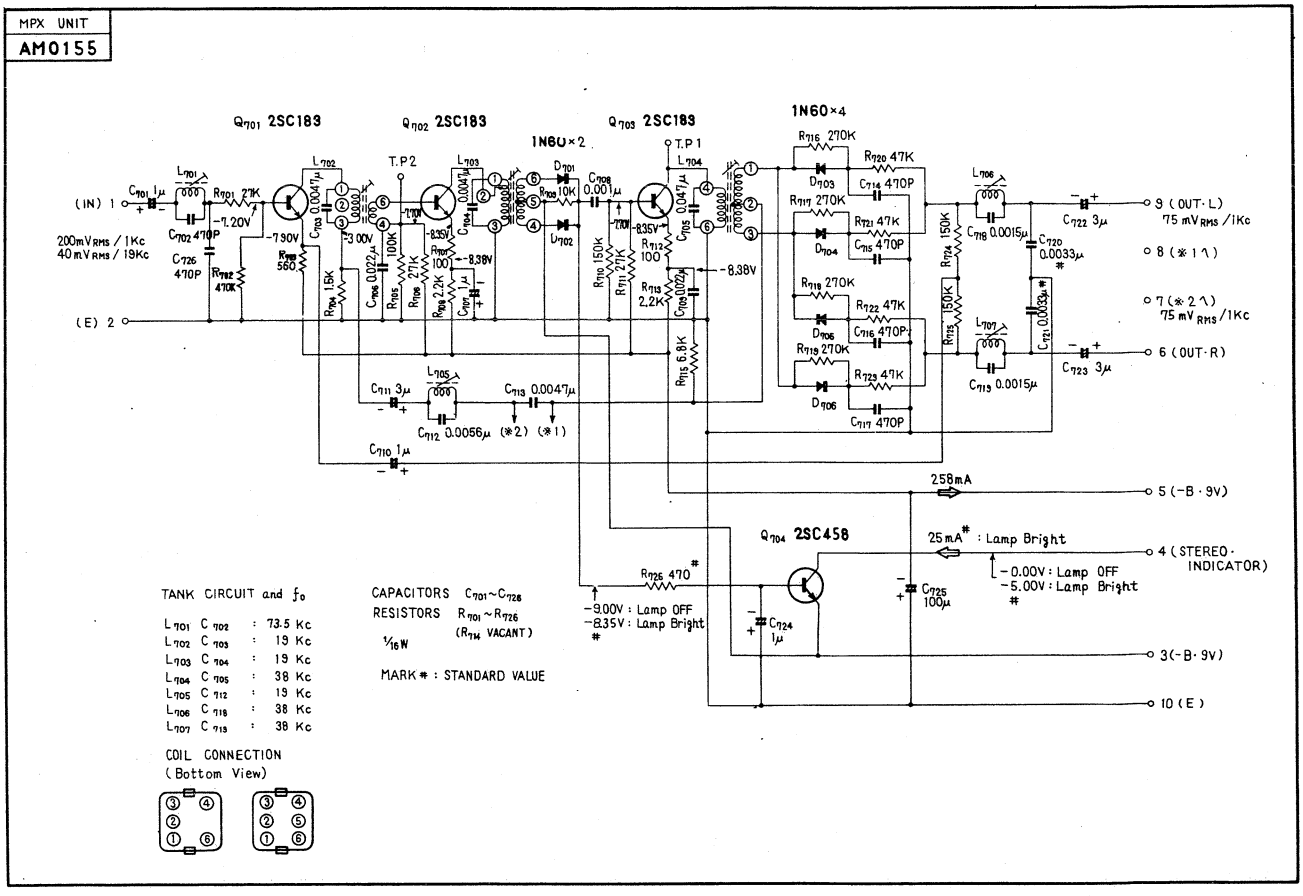

18

Model SX-300T (New type)

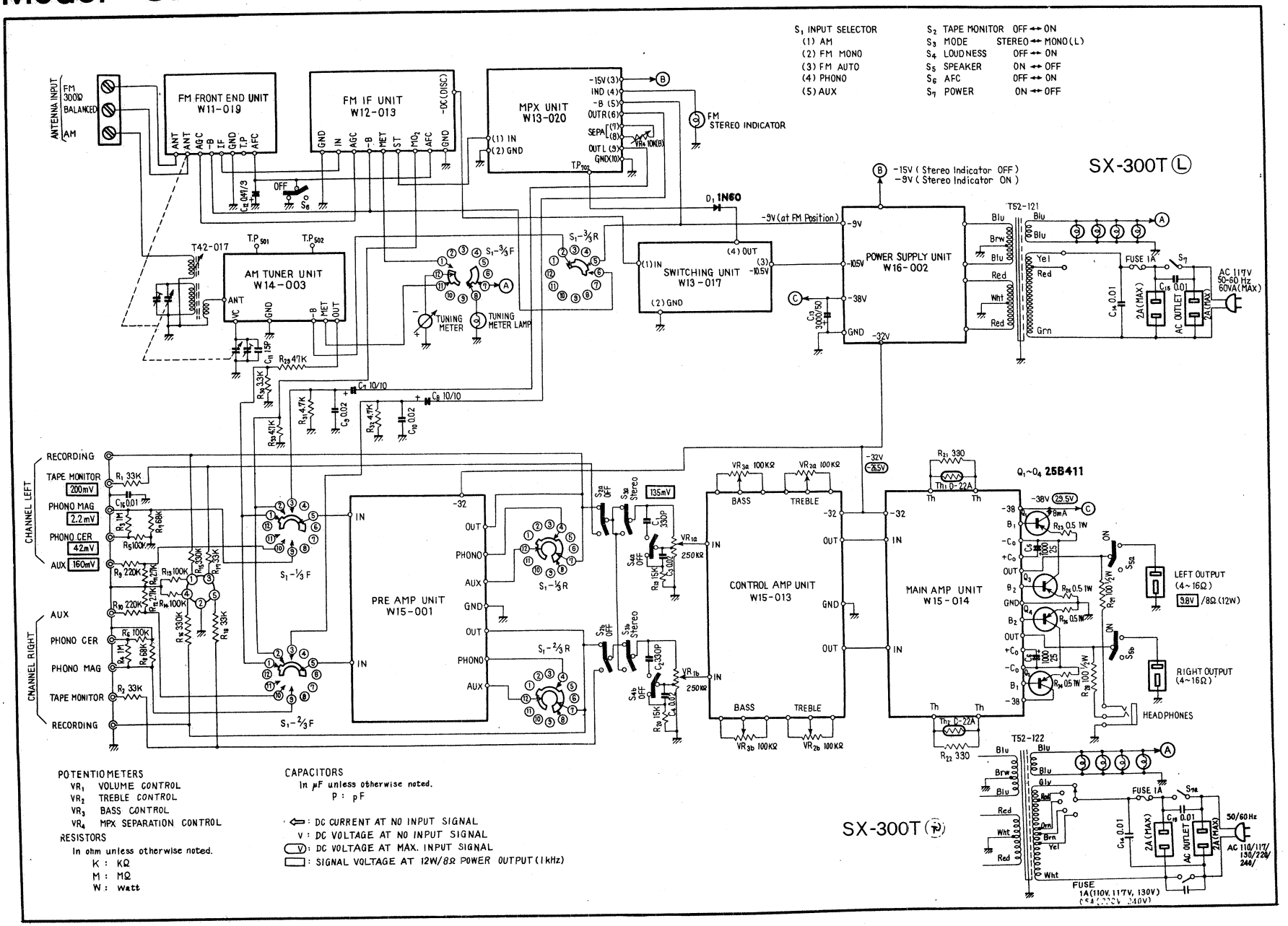

PRE AMP UNIT W15-001

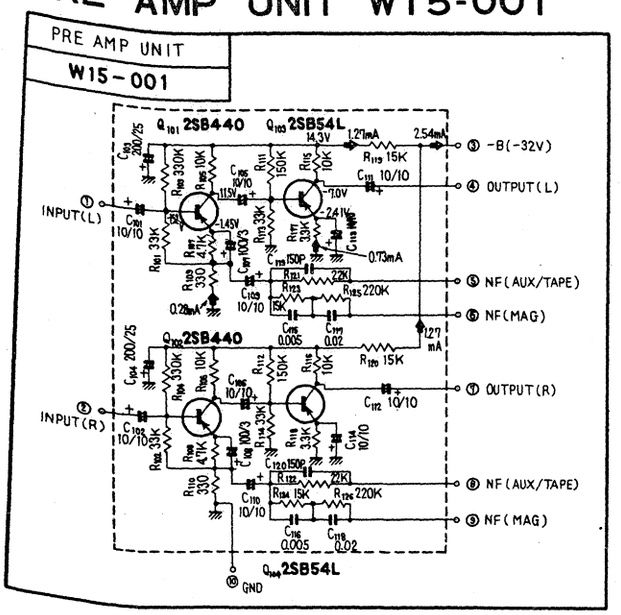

CONTROL AMP UNIT W15-013

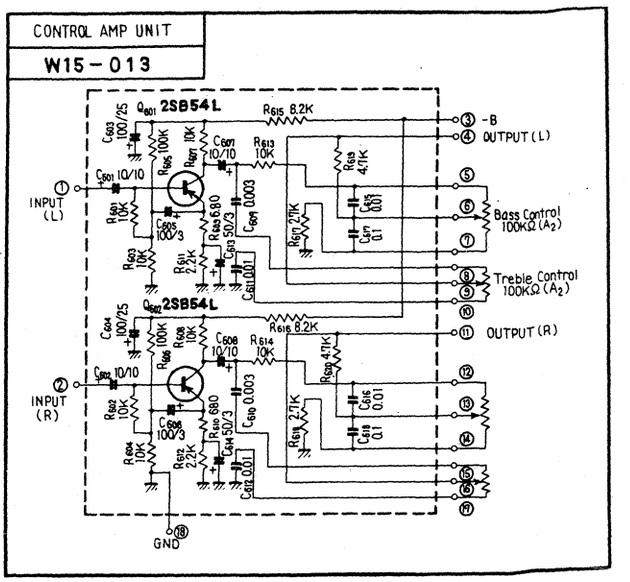

MAIN AMP UNIT W15-014

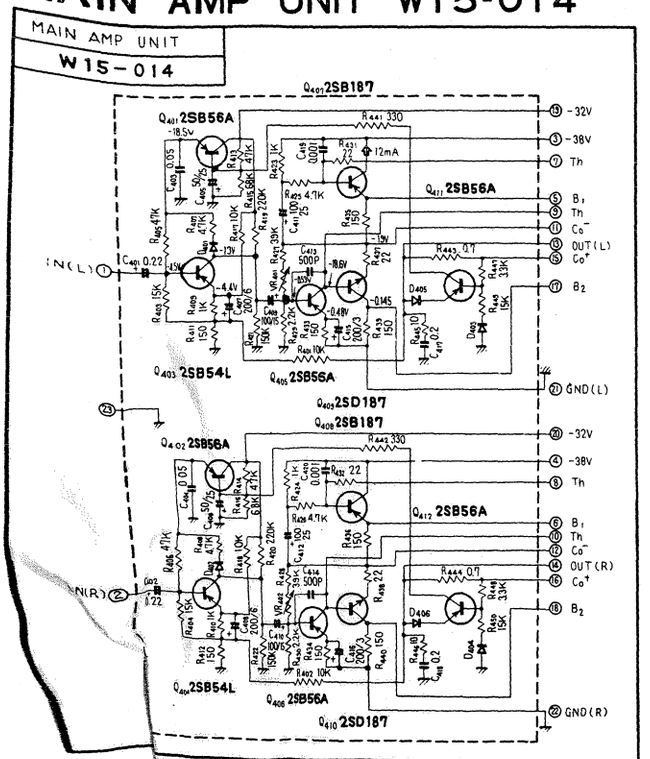

POWER SUPPLY UNIT W16-002

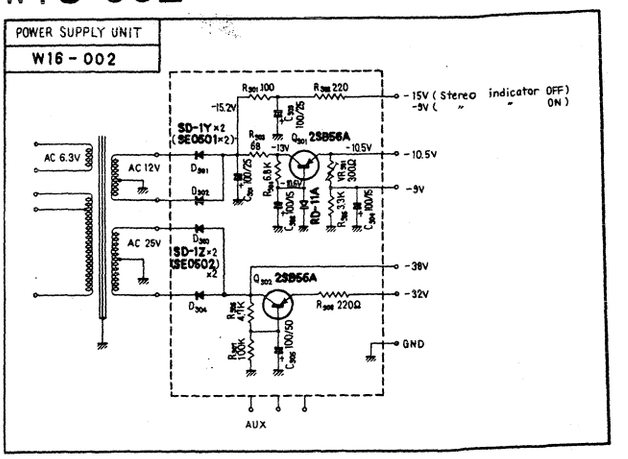

AM TUNER UNIT W14-003

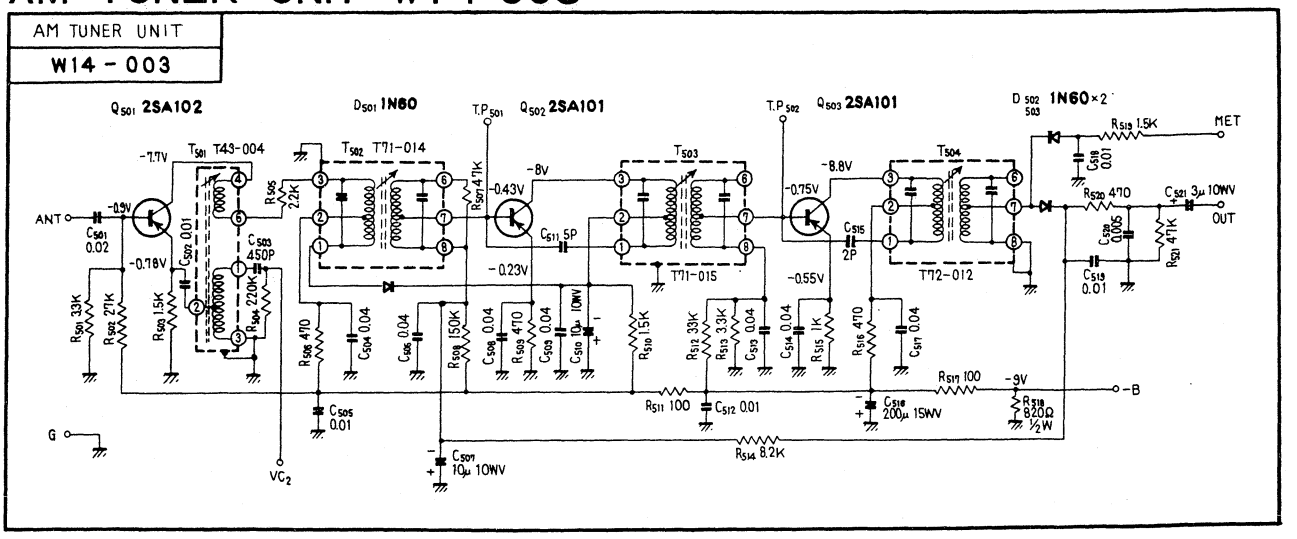

FM FRONTEND W11-019

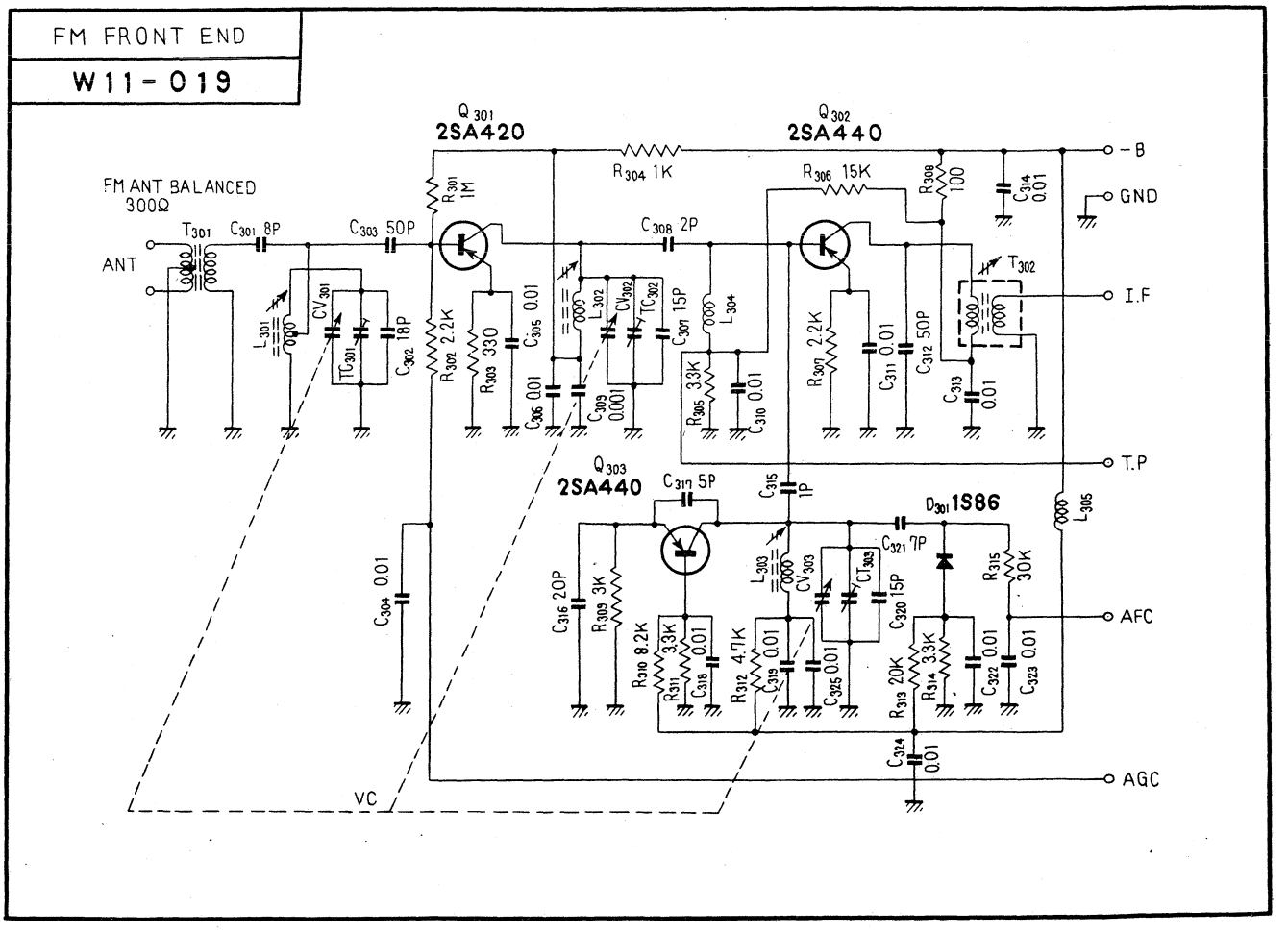

FM IF UNIT W12-013

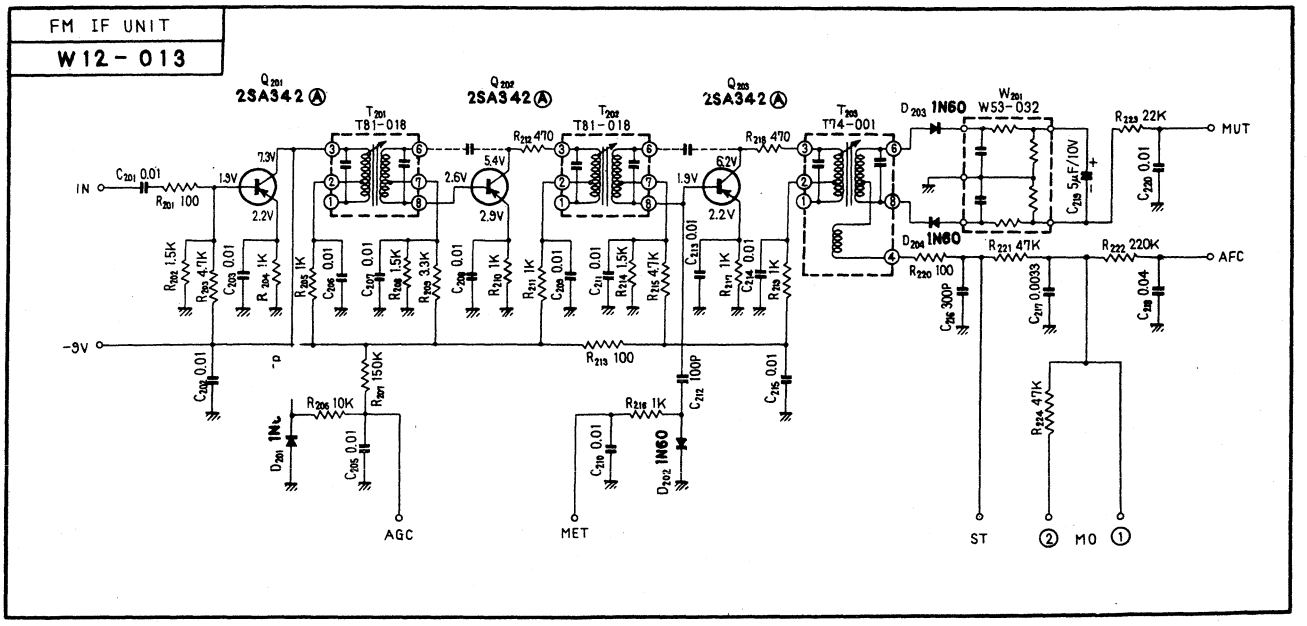

MPX UNIT W13-020

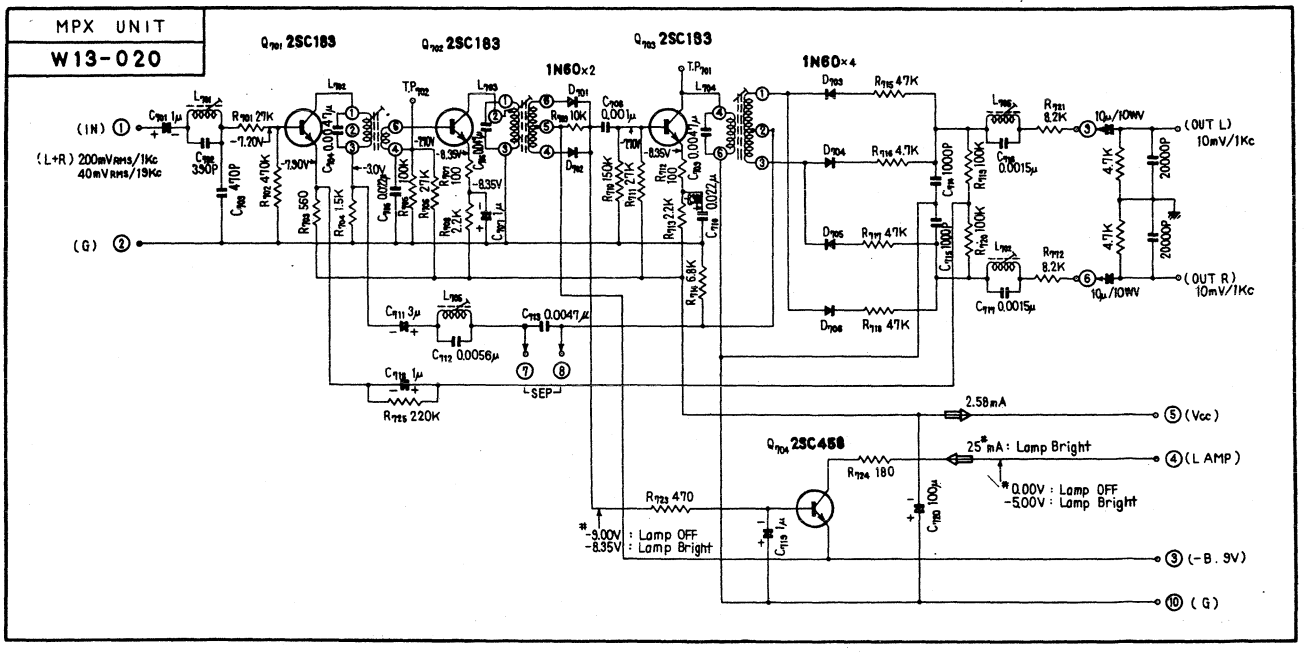

SWITCHING UNIT W13-017

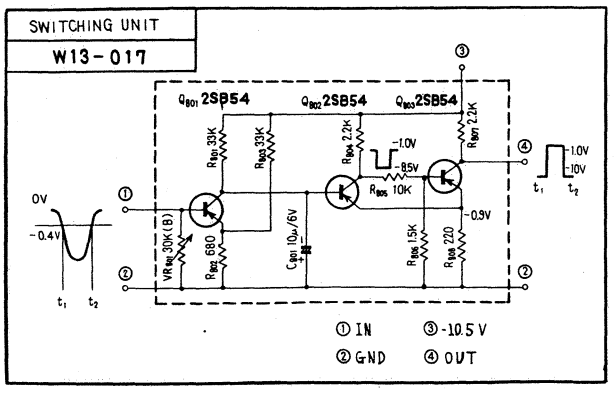

Model SX-440/F

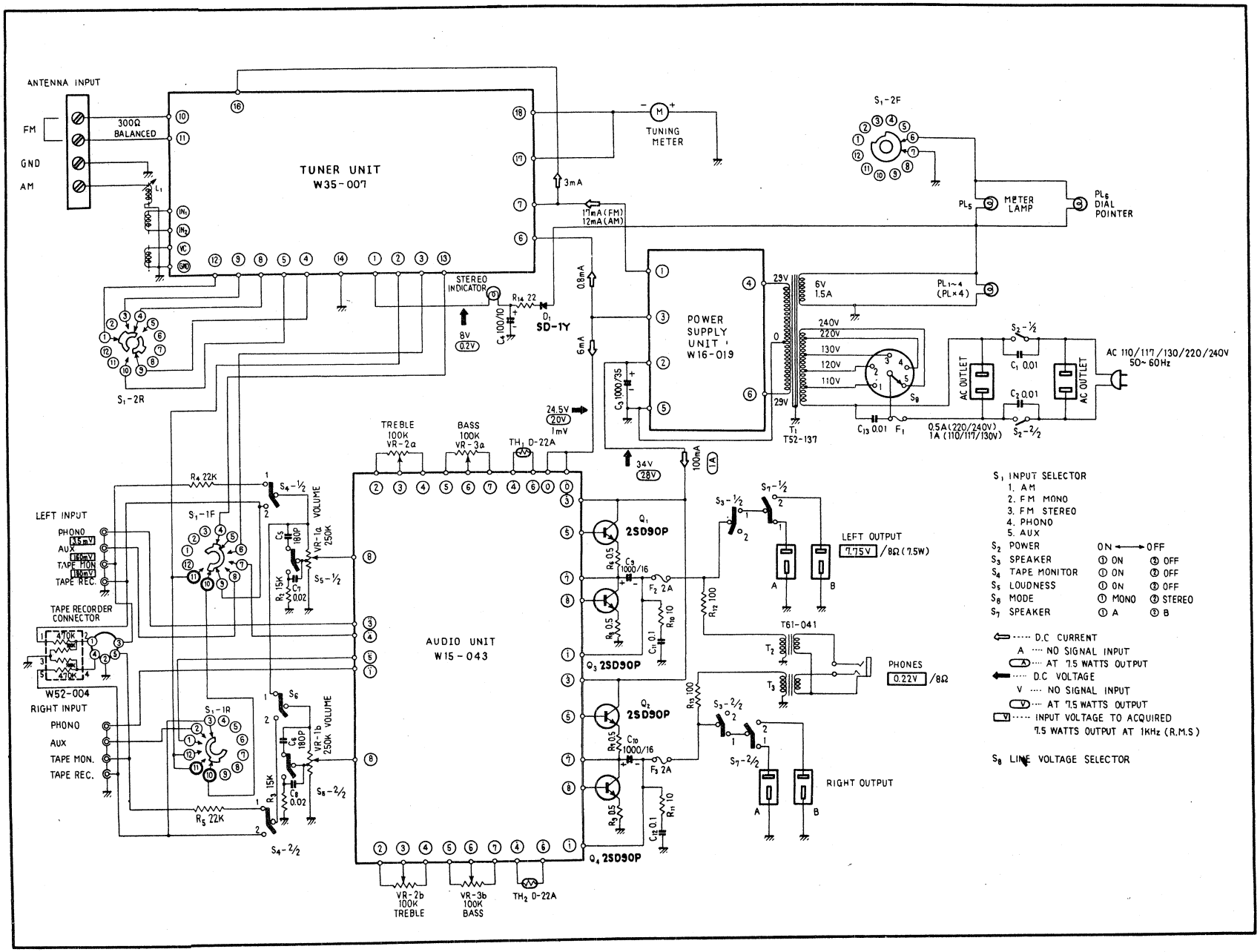

TUNER UNIT W35-007

TUNER UNIT
W35-007

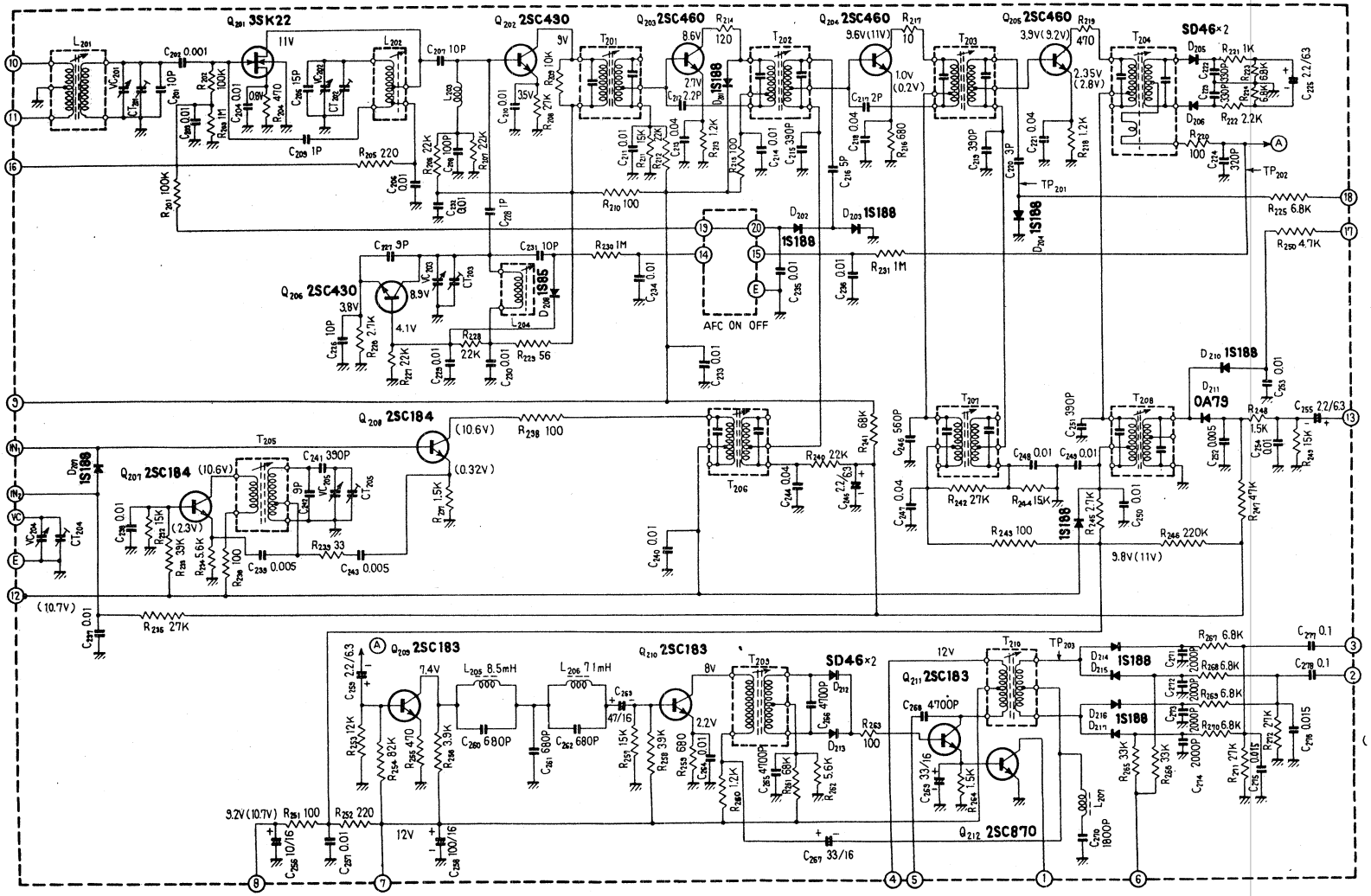

23
23

AUDIO UNIT W15-043

AUDIO UNIT
W15-043

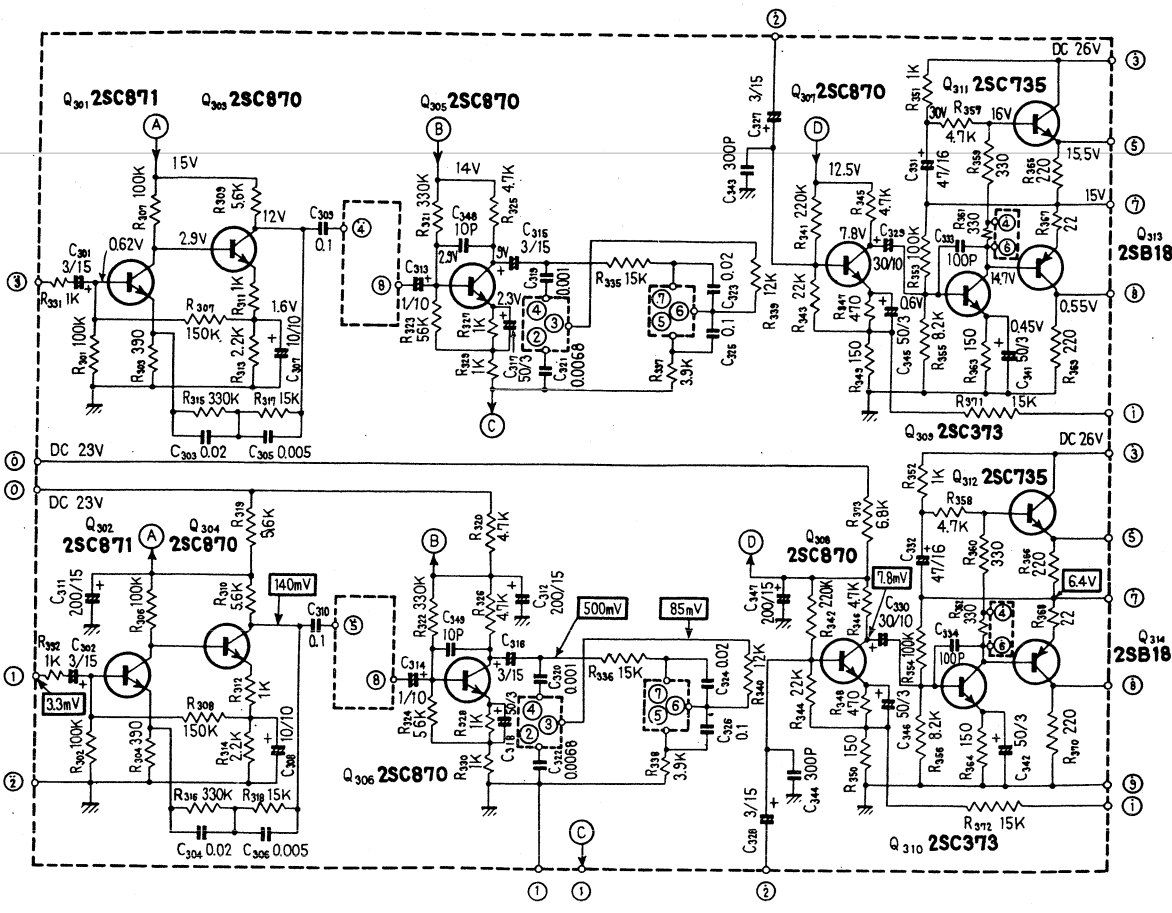

POWER SUPPLY UNIT W16-019

POWER SUPPLY UNIT
W16-019

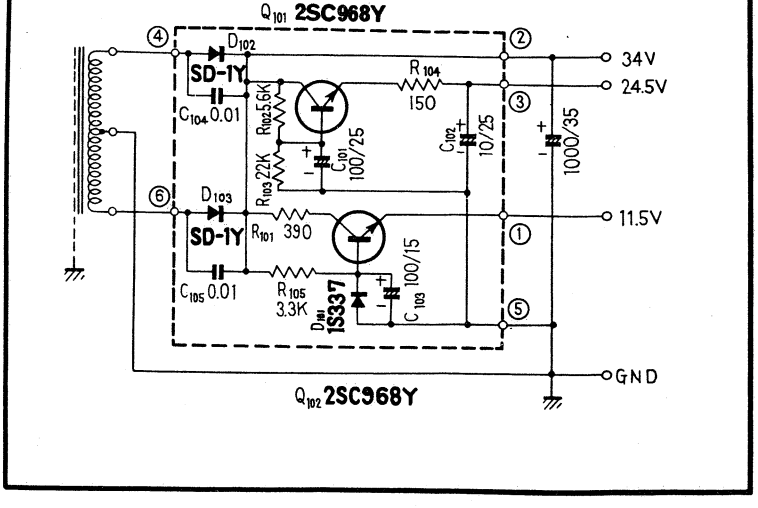

24

Model SX-440 / KC / FVW

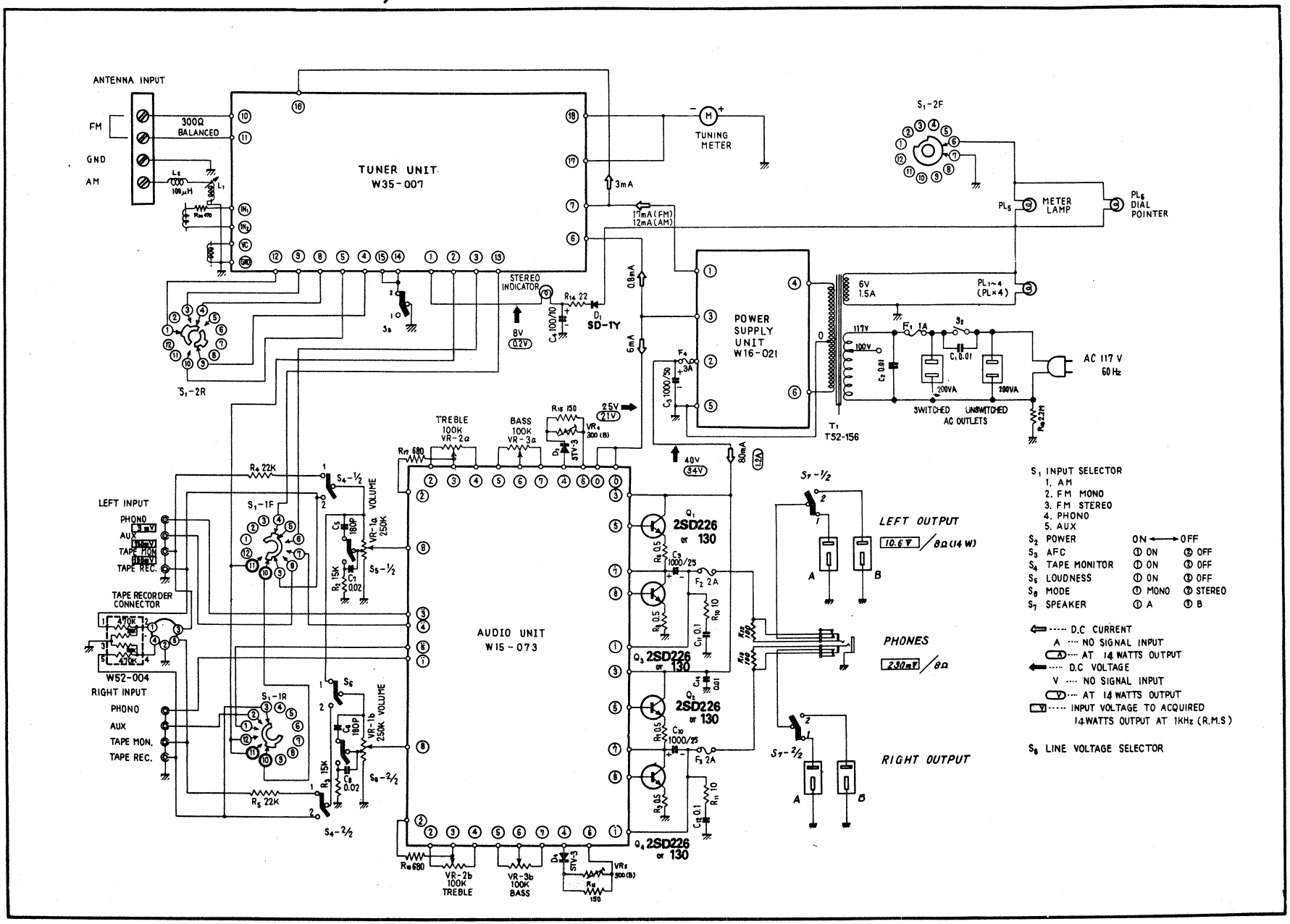

25
25

TUNER UNIT W35-007

TUNER UNIT
W35-007

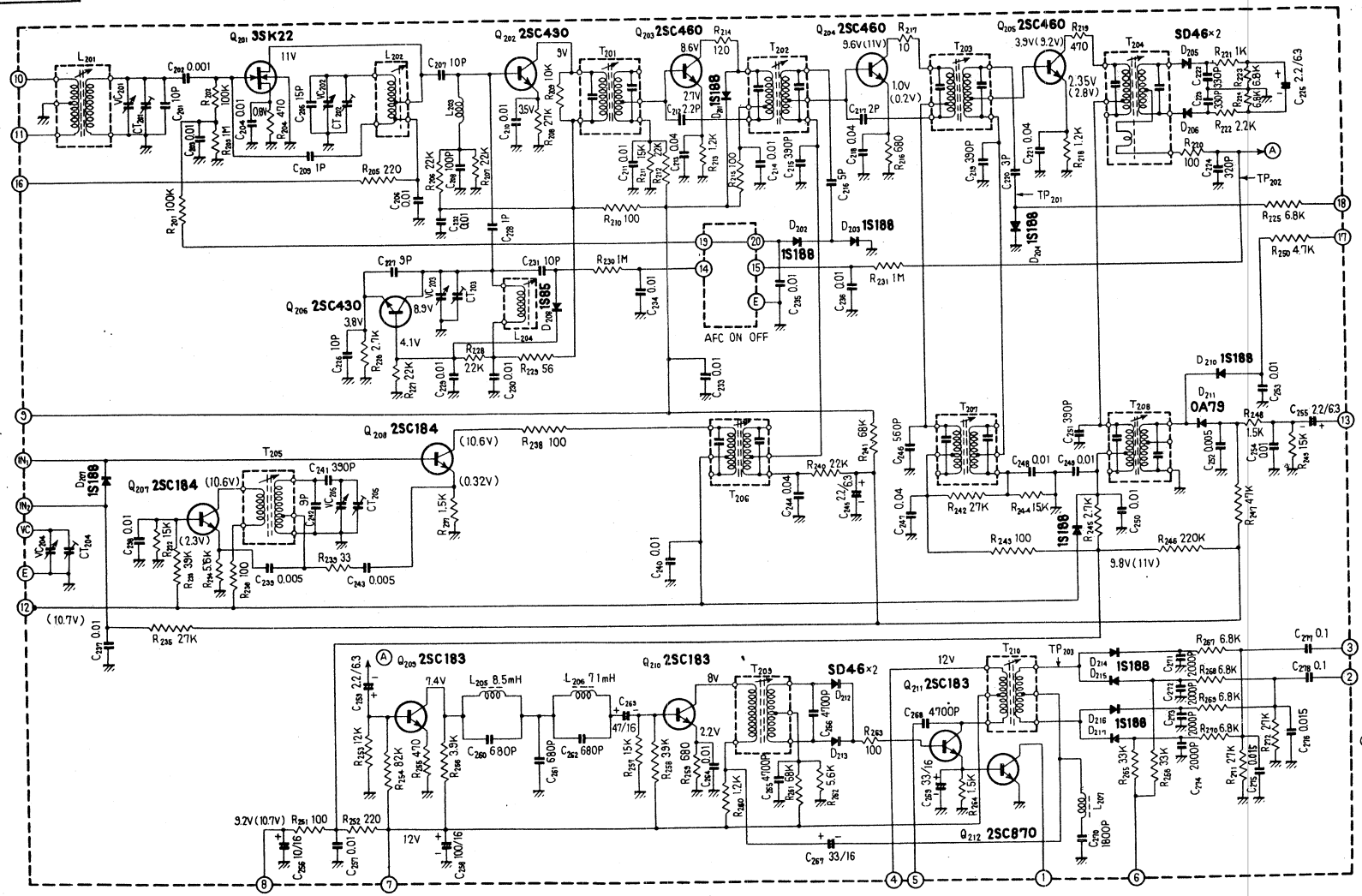

26

26

AUDIO UNIT W15-073

AUDIO UNIT
W15-073

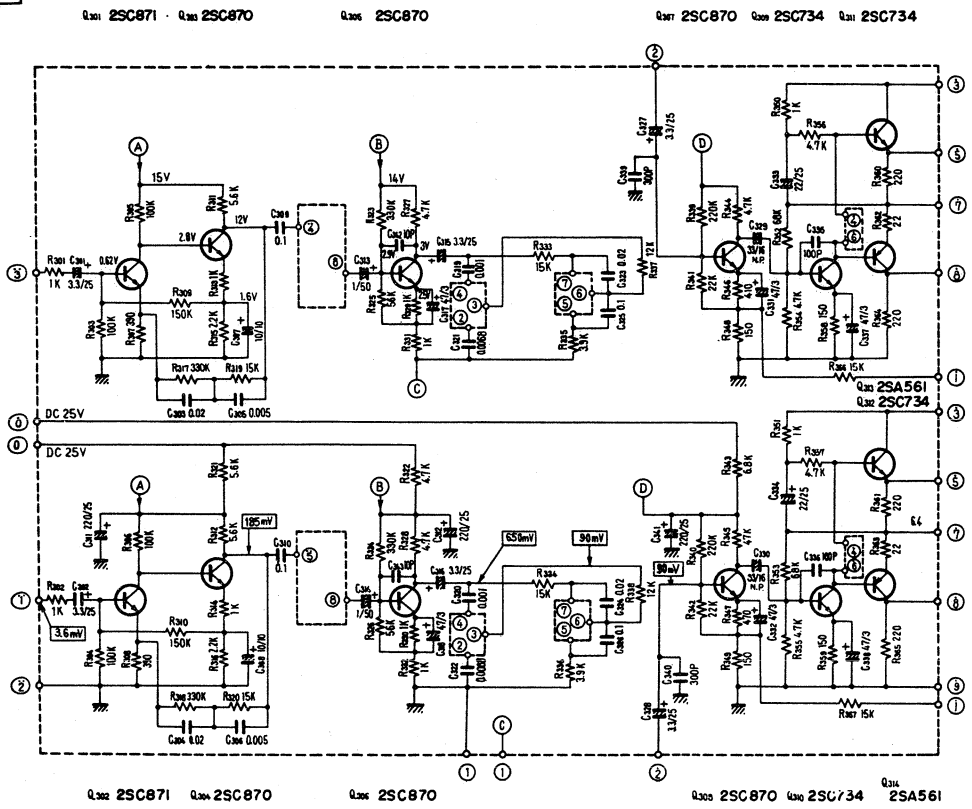

POWER SUPPLY UNIT W16-021

POWER SUPPLY UNIT
W16 - 021

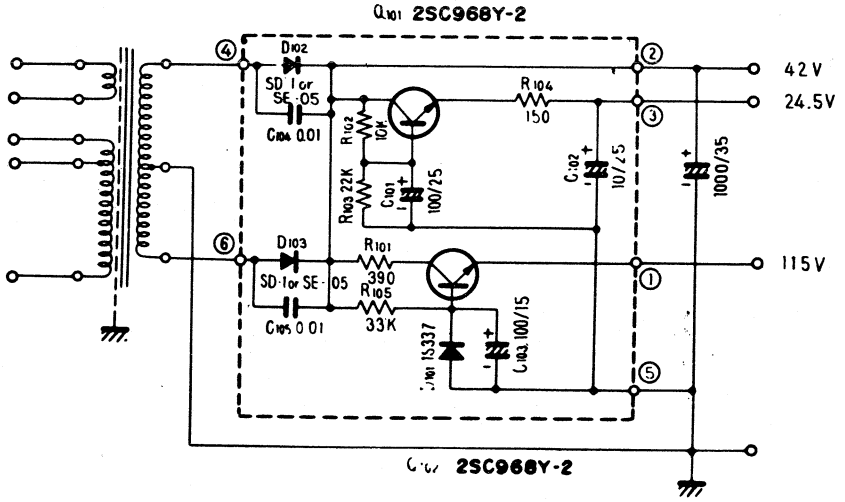

27

Model SX-525

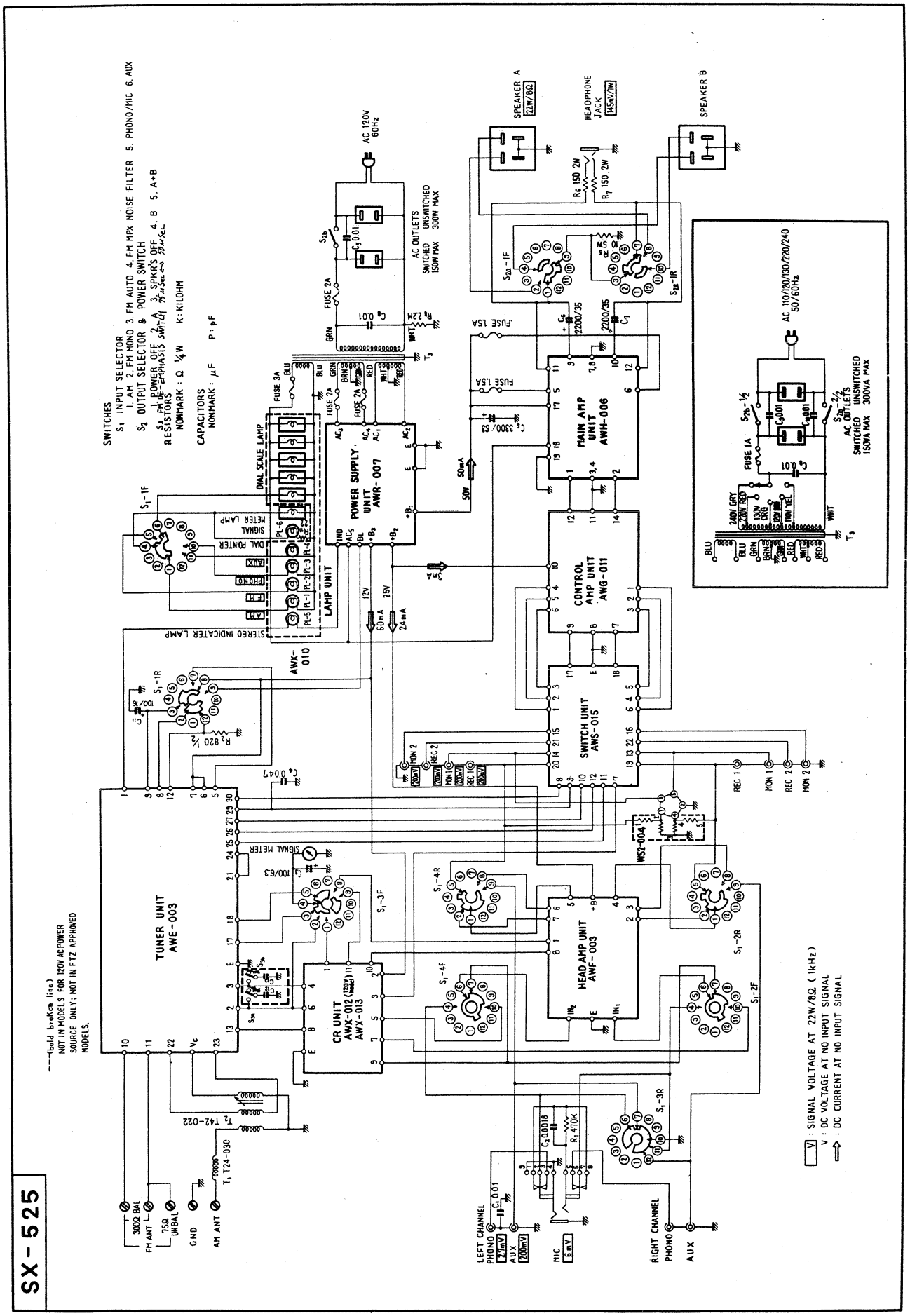
SX-525
SWITCHES
S1 INPUT SELECTOR
1. AM 2. FM MONO 3. FM AUTO 4. FM MPX NOISE FILTER 5. PHONO/MIC 6. AUX
S2 OUTPUT SELECTOR & POWER SWITCH
S3 FM DE-EMPHASIS SWITCH 2-A 75μSec ↔ 50μSec
POWER OFF 1. SPKR'S OFF 4. B 5. A+B
RESISTORS NONMARK : Ω ¼W K:KILOHM
CAPACITORS NONMARK : μF P : pF
---(bold broken line) NOT IN MODELS FOR 120V AC POWER SOURCE ONLY: NOT IN FTZ APPROVED MODELS.
V : SIGNAL VOLTAGE AT 22W/8Ω (1kHz)
V : DC VOLTAGE AT NO INPUT SIGNAL
⟹ : DC CURRENT AT NO INPUT SIGNAL
TUNER UNIT AWE-003
CR UNIT AWX-012 AWX-013
HEAD AMP UNIT AWF-003
SWITCH UNIT AWS-015
CONTROL AMP UNIT AWG-011
MAIN AMP UNIT AWH-006
POWER SUPPLY UNIT AWR-007
LAMP UNIT AWX-010
SPEAKER A 22W/8Ω
SPEAKER B
HEADPHONE JACK 145mV/1W
AC 120V 60Hz
AC OUTLETS SWITCHED UNSWITCHED 150W MAX 300W MAX
AC 110/120/130/220/240 50/60Hz
AC OUTLETS SWITCHED UNSWITCHED 150VA MAX 300VA MAX
FM ANT 300Ω BAL
75Ω UNBAL
GND
AM ANT
LEFT CHANNEL PHONO 2.7mV AUX 200mV
MIC 6mV
RIGHT CHANNEL PHONO AUX
REC 1 MON 1 REC 2 MON 2
SIGNAL METER
DIAL POINTER
DIAL SCALE LAMP
SIGNAL METER LAMP
STEREO INDICATER LAMP
FUSE 3A
FUSE 2A
FUSE 1.5A
FUSE 1A

TUNER UNIT

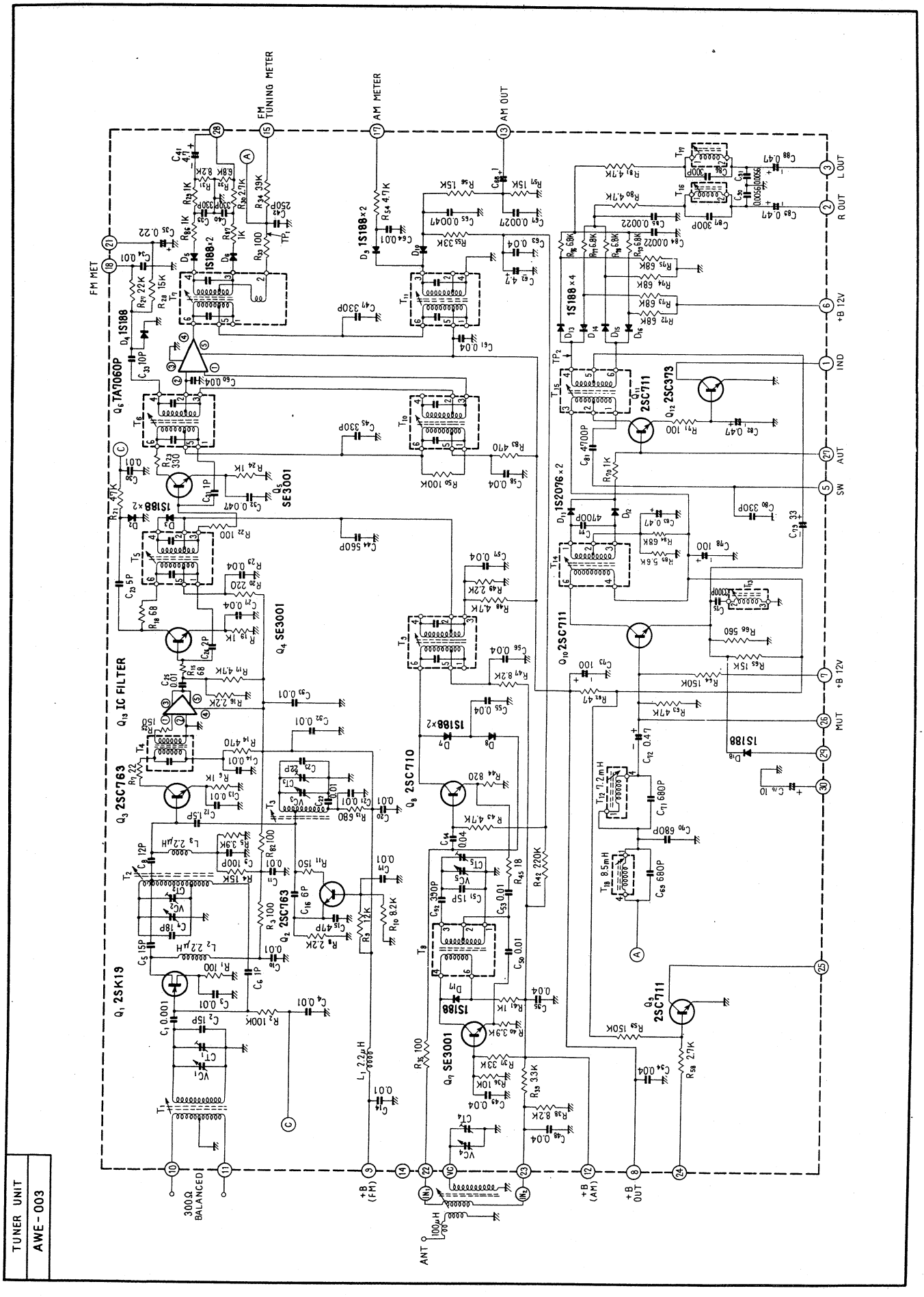

TUNER UNIT
AWE-003

HEAD AMP UNIT

HEAD AMP UNIT
AWF – 003

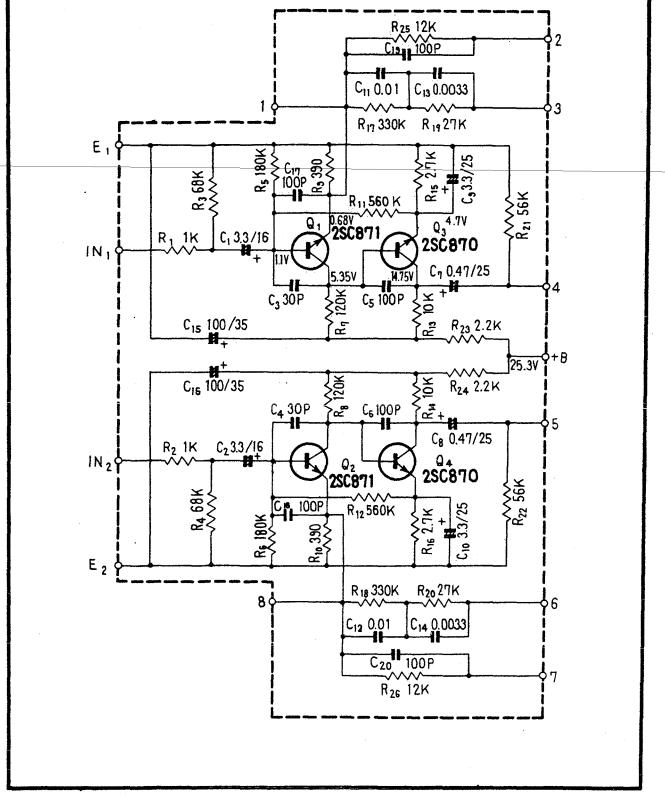

CONTROL AMP UNIT

CONTROL AMP UNIT
AWG - 011

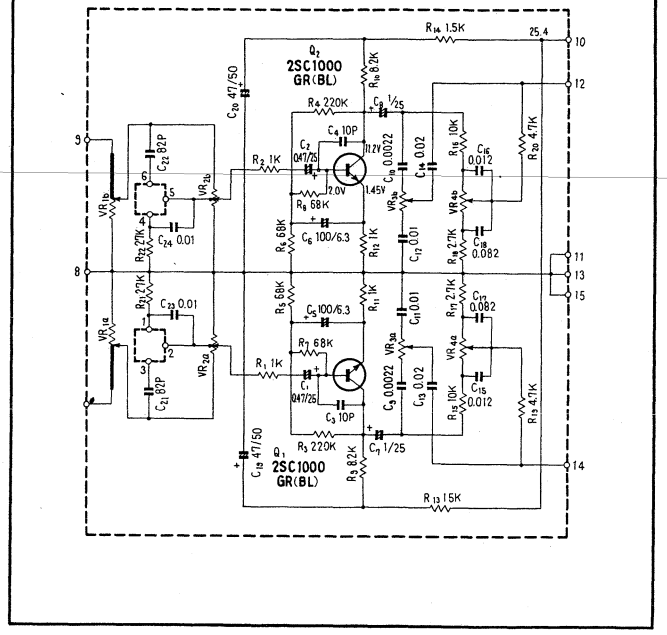

MAIN AMP UNIT

MAIN AMP UNIT
AWH-006

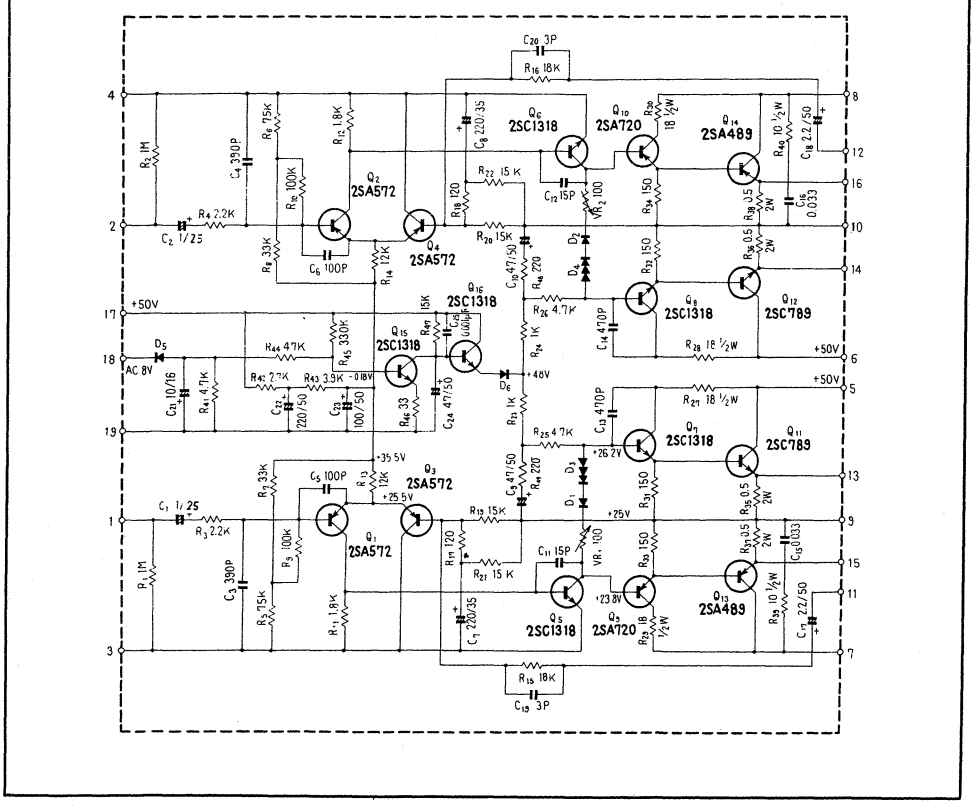

30

POWER SUPPLY UNIT

POWER SUPPLY UNIT
AWR - 007

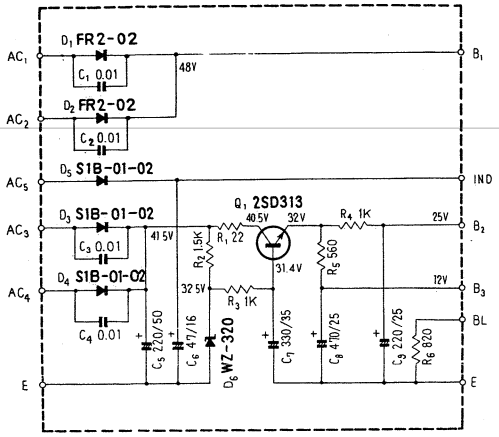

SWITCH UNIT

SWITCH UNIT
AWS - 015

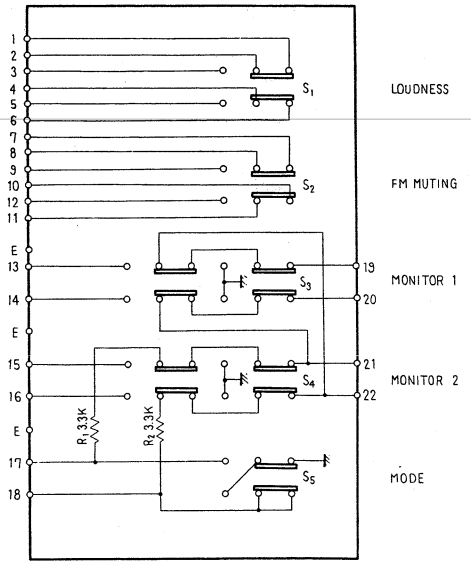

CR UNIT

CR UNIT
AWX-013

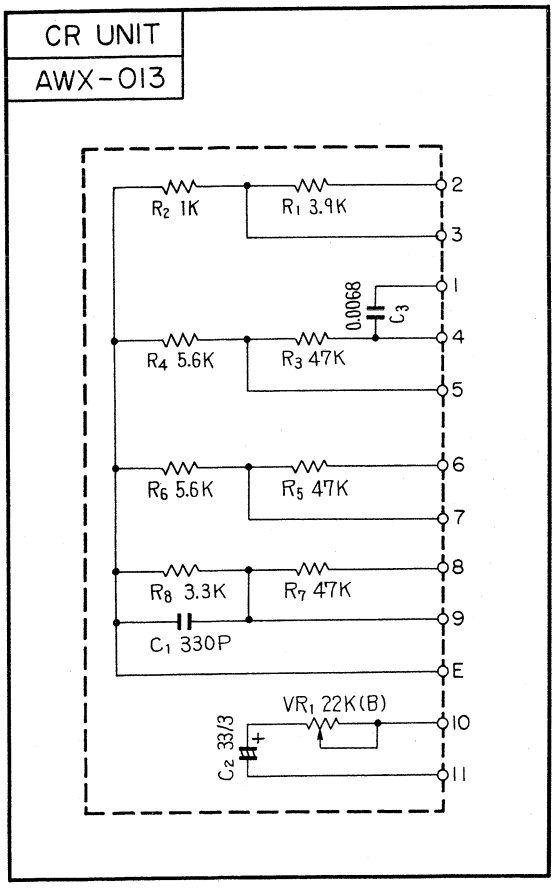

CR UNIT for KW model

CR UNIT
AWX-012

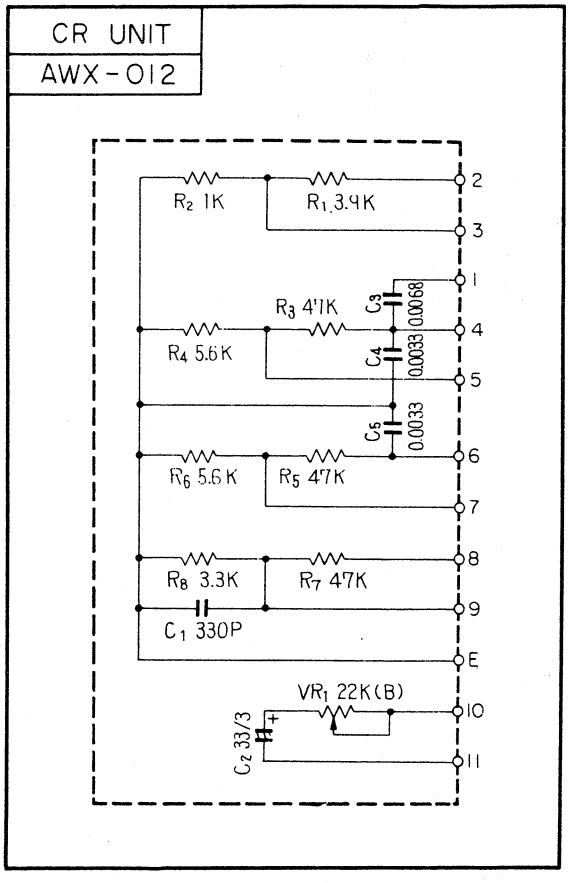

Model SX-600T

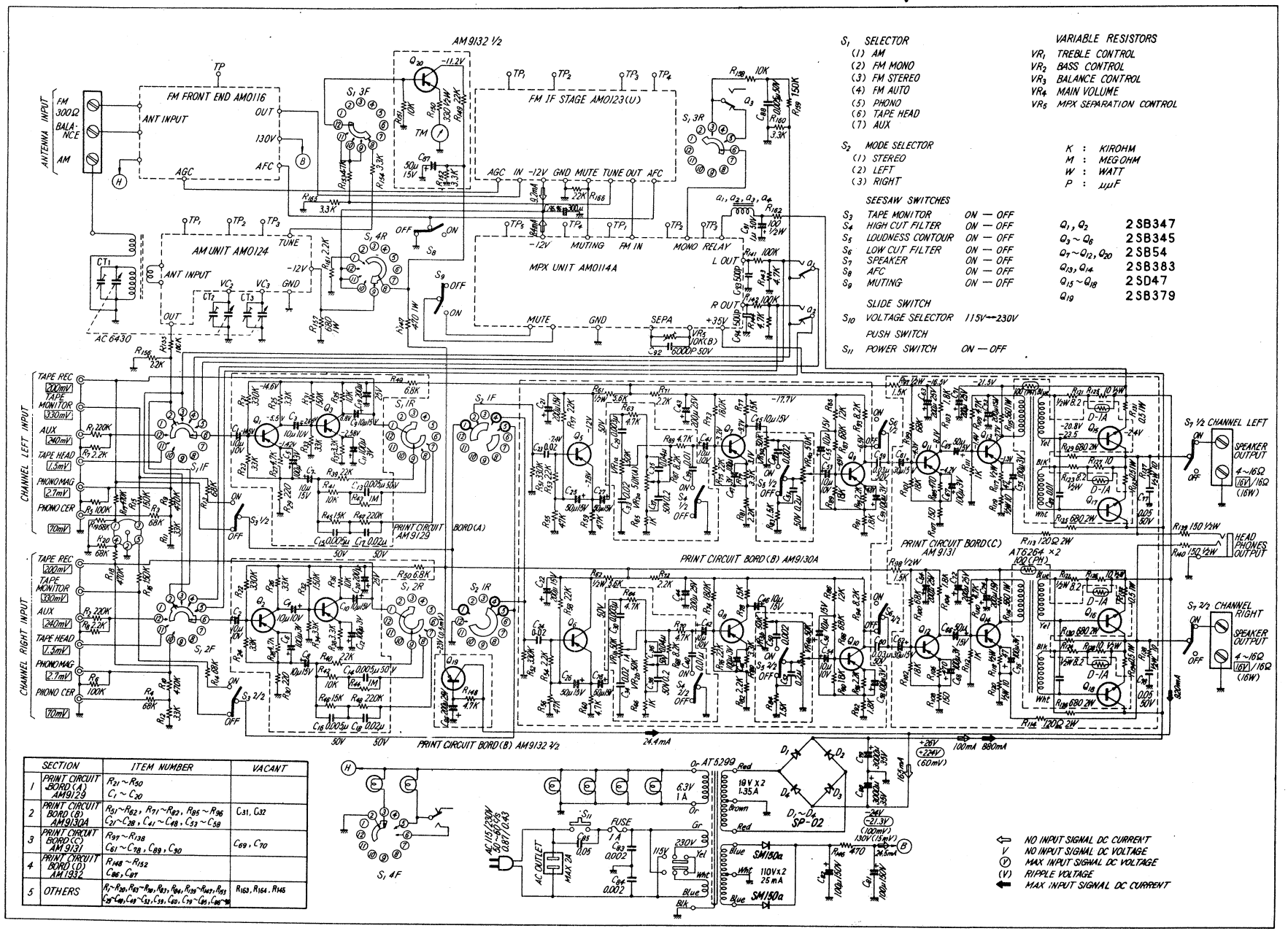

	SECTION	ITEM NUMBER	VACANT
1	PRINT CIRCUIT BORD (A) AM9129	$R_{21} \sim R_{50}$ $C_1 \sim C_{20}$	
2	PRINT CIRCUIT BORD (B) AM9130A	$R_{91} \sim R_{92}$, $R_{71} \sim R_{82}$, $R_{95} \sim R_{96}$ $C_{21} \sim C_{28}$, $C_{41} \sim C_{48}$, $C_{53} \sim C_{58}$	C_{31}, C_{32}
3	PRINT CIRCUIT BORD (C) AM 9131	$R_{97} \sim R_{138}$ $C_{61} \sim C_{78}$, C_{89}, C_{90}	C_{69}, C_{70}
4	PRINT CIRCUIT BORD (D) AM 1932	$R_{148} \sim R_{152}$ C_{86}, C_{87}	
5	OTHERS	$R_1 \sim R_{20}$, $R_{83} \sim R_{90}$, R_{93}, R_{94}, $R_{139} \sim R_{147}$, R_{153} $C_{29} \sim C_{30}$, $C_{49} \sim C_{52}$, C_{59}, C_{60}, $C_{79} \sim C_{85}$, $C_{88} \sim$	R_{163}, R_{164}, R_{145}

32

AM TUNER UNIT AM0124

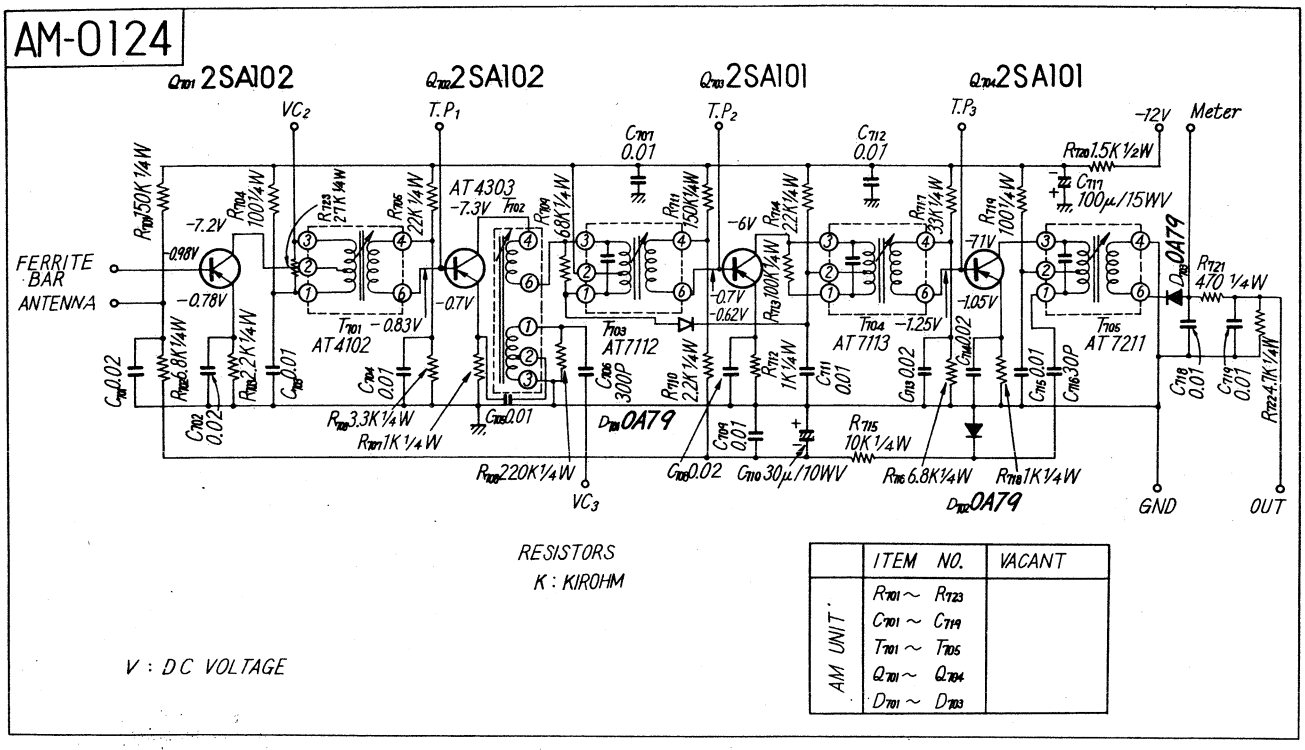

FM FRONTEND AM0116

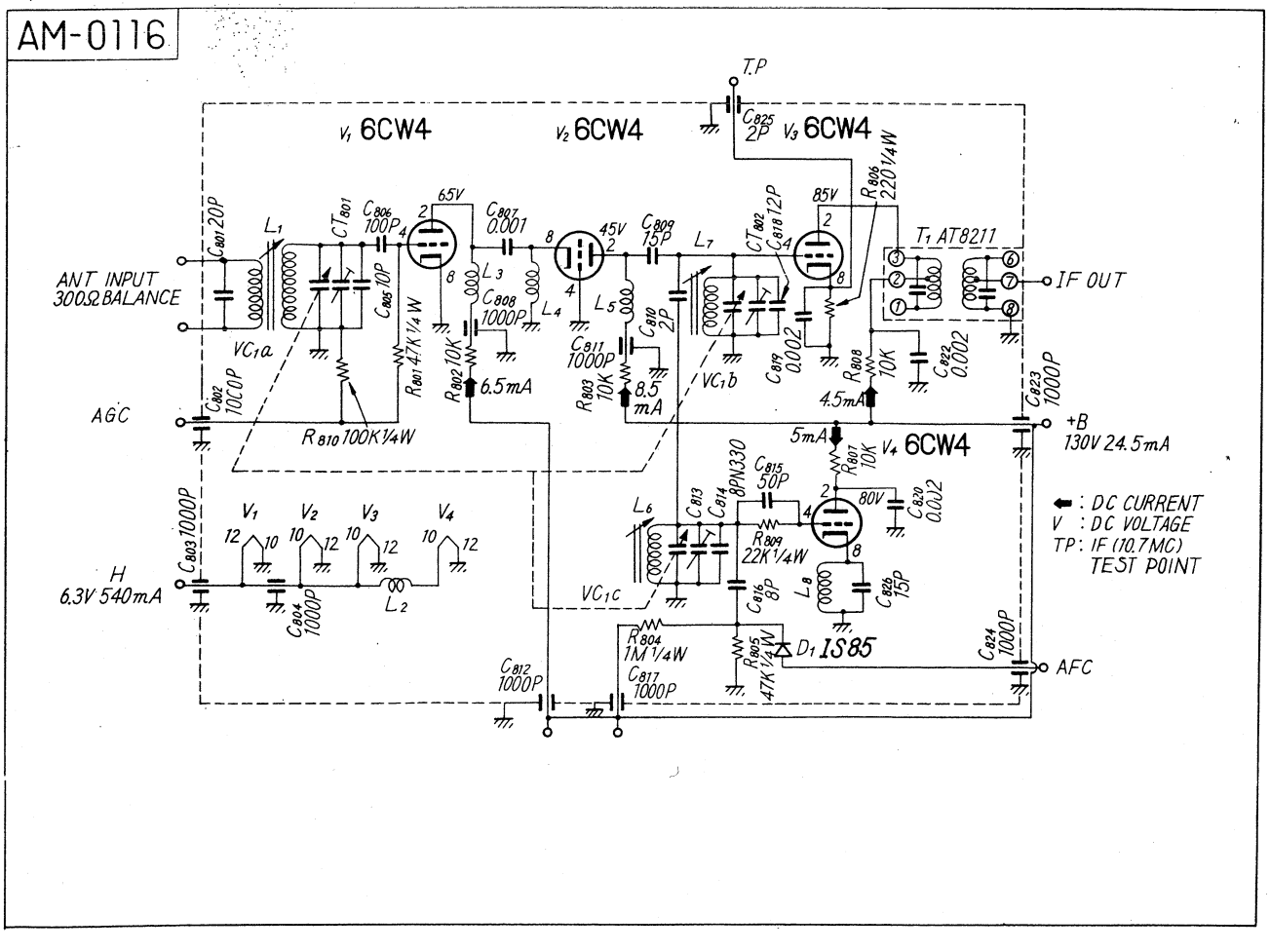

FM IF UNIT AM0123U

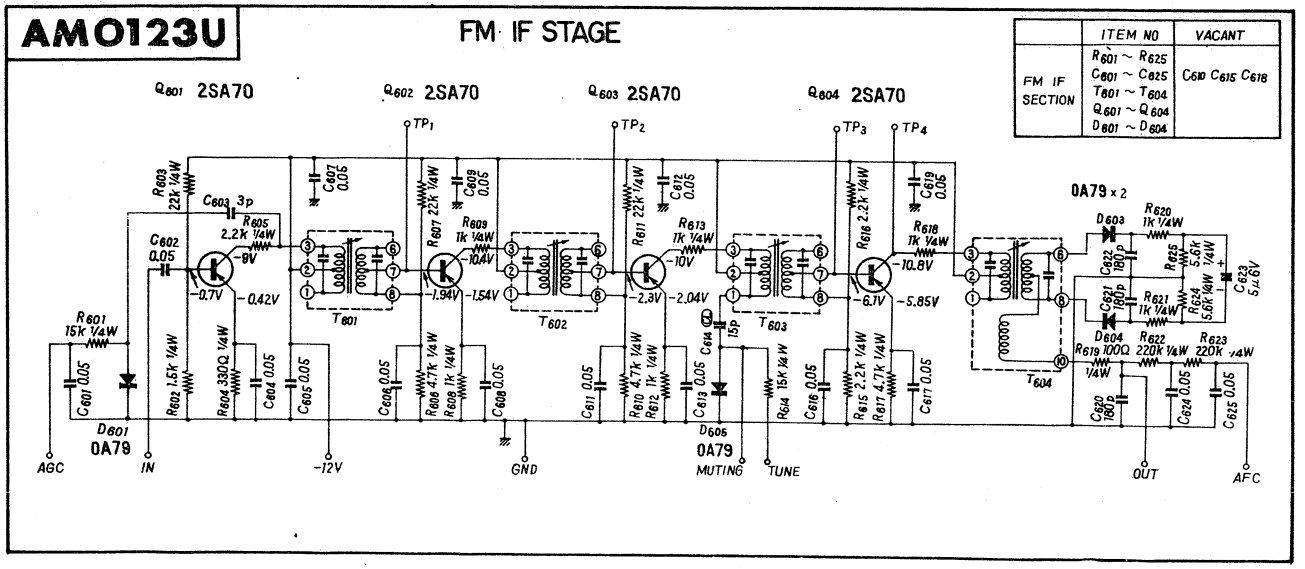

	ITEM NO	VACANT
FM IF SECTION	$R_{601} \sim R_{625}$ $C_{601} \sim C_{625}$ $T_{601} \sim T_{604}$ $Q_{601} \sim Q_{604}$ $D_{601} \sim D_{604}$	C_{610} C_{615} C_{618}

MPX UNIT AM0114

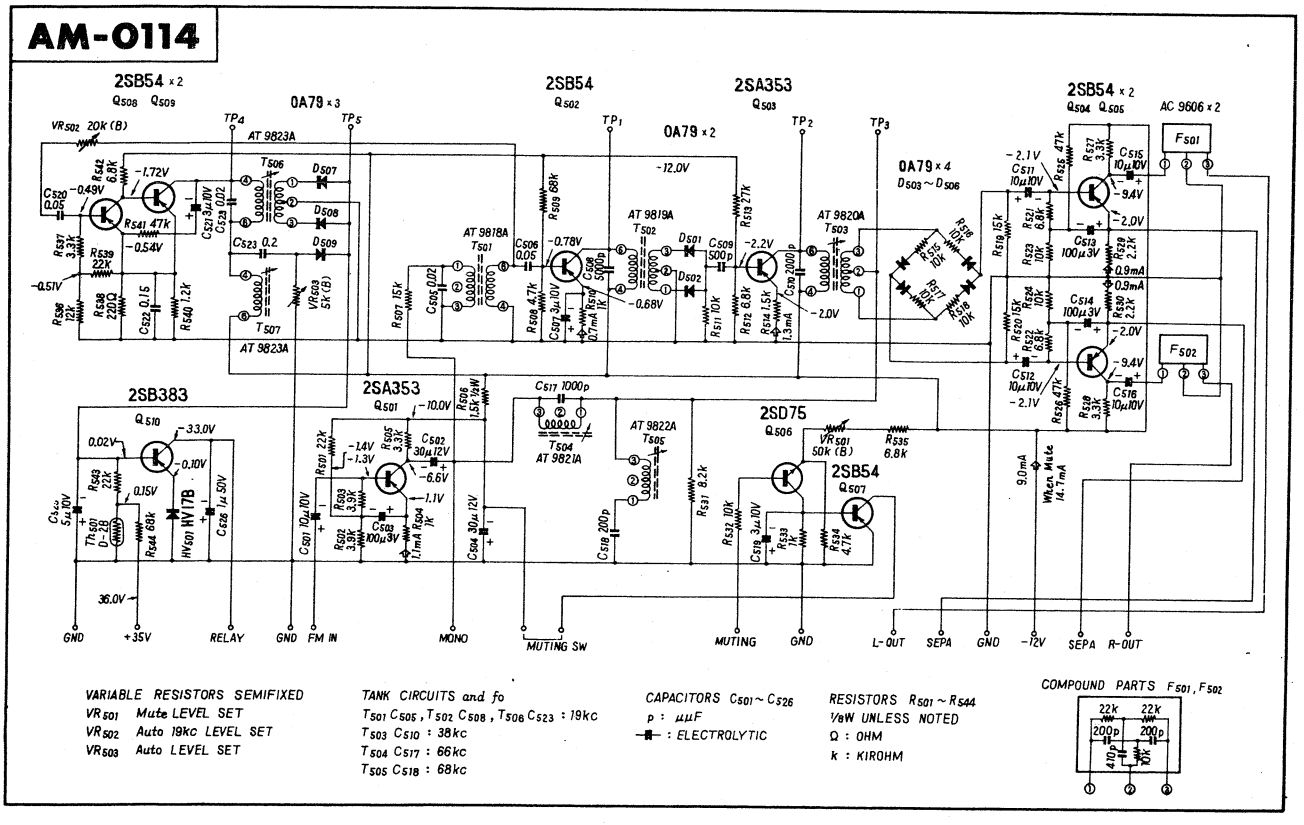

VARIABLE RESISTORS SEMIFIXED
VR_{501} Mute LEVEL SET
VR_{502} Auto 19kc LEVEL SET
VR_{503} Auto LEVEL SET

TANK CIRCUITS and fo
T_{501} C_{505}, T_{502} C_{508}, T_{506} C_{523} : 19kc
T_{503} C_{510} : 38kc
T_{504} C_{517} : 66kc
T_{505} C_{518} : 68kc

CAPACITORS $C_{501} \sim C_{526}$
p : μμF
—||— : ELECTROLYTIC

RESISTORS $R_{501} \sim R_{544}$
1/8W UNLESS NOTED
Ω : OHM
k : KIROHM

COMPOUND PARTS F_{501}, F_{502}

34

Model SX-626

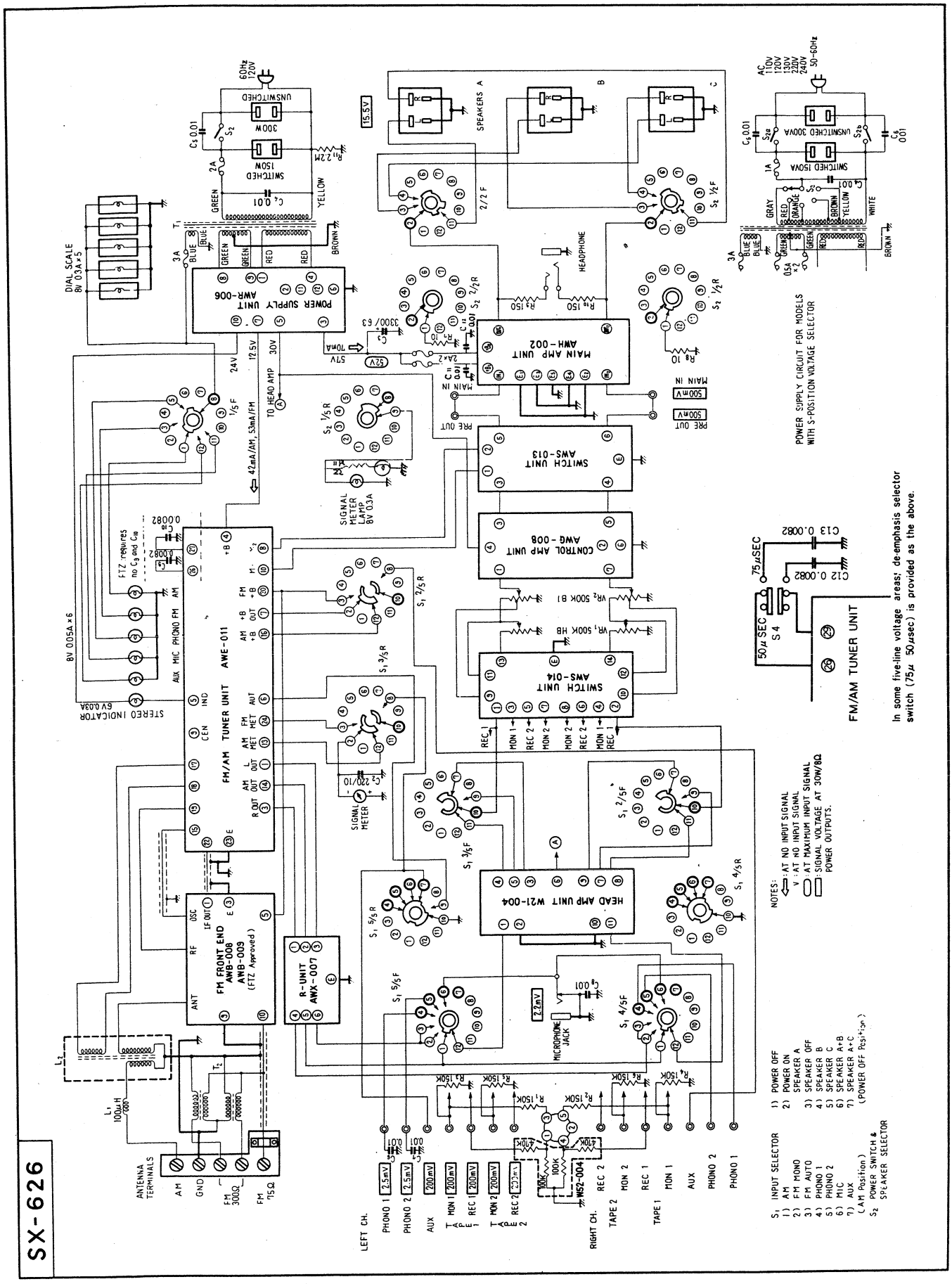

35

FM/AM TUNER UNIT

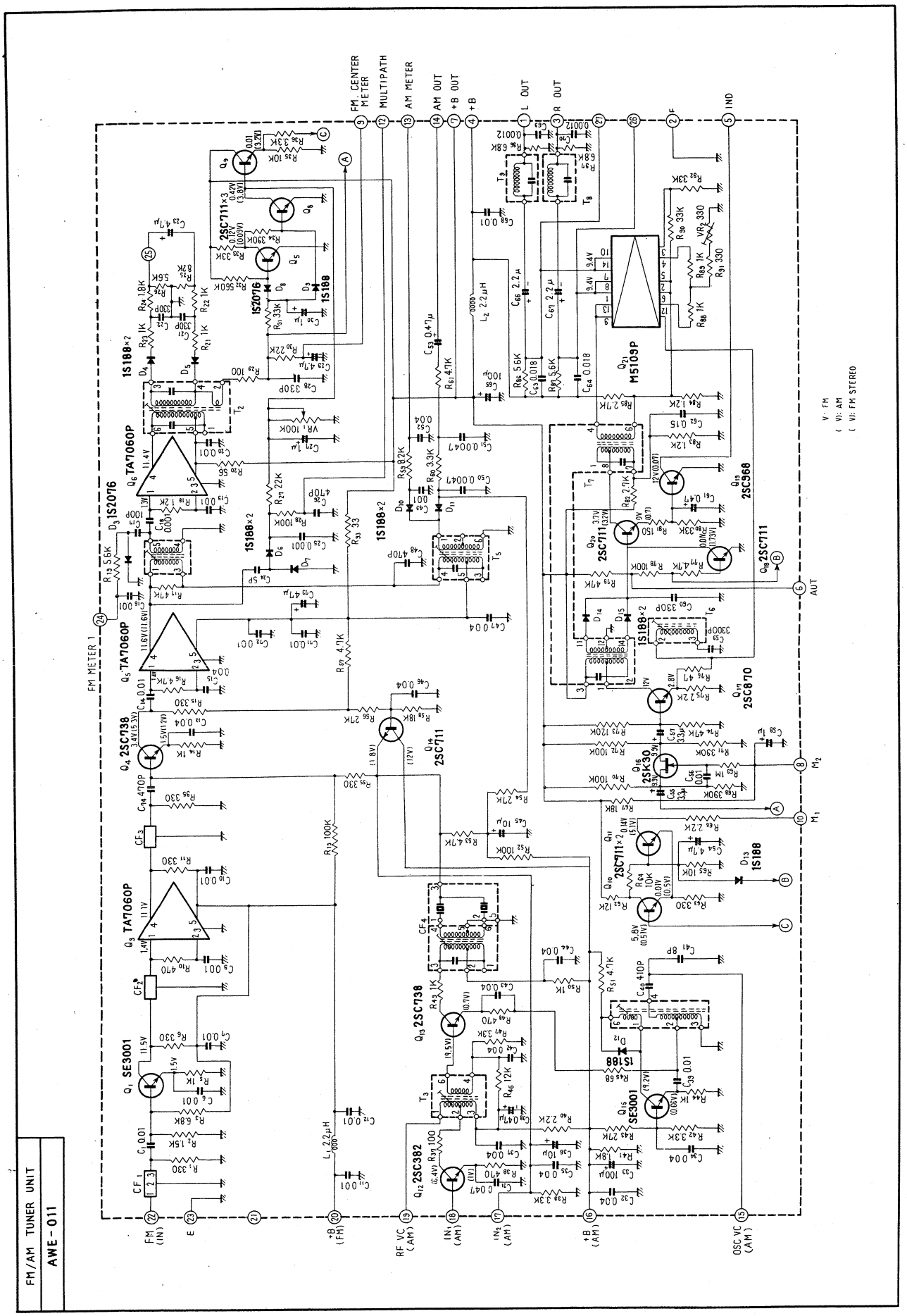

FM/AM TUNER UNIT
AWE-011

FM FRONT END

FM-FRONT END
AWB-008
AWB-009 (FTZ APPROVED)

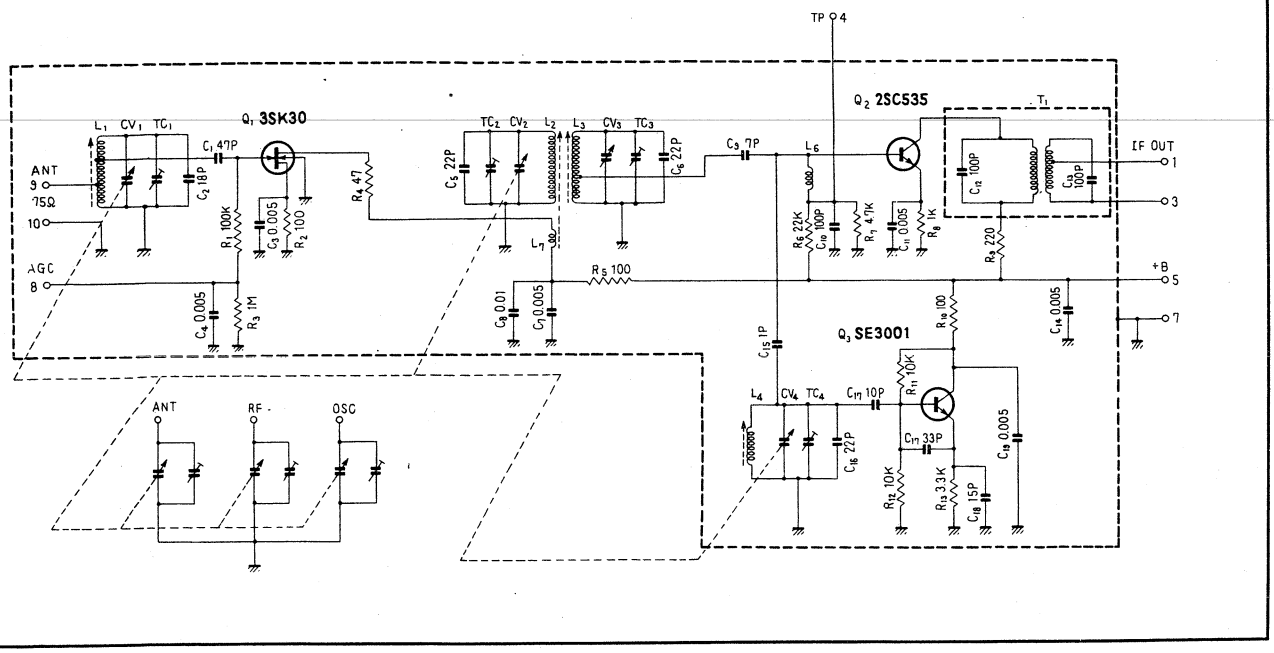

HEAD AMP UNIT

HEAD AMP UNIT
W21-004

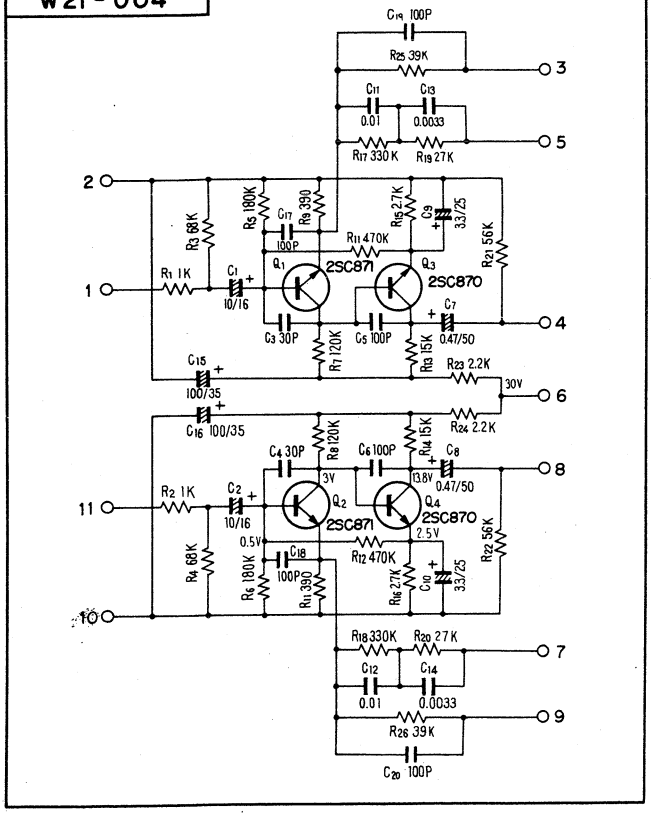

CONTROL AMP UNIT

CONTROL AMP UNIT
AWG-008

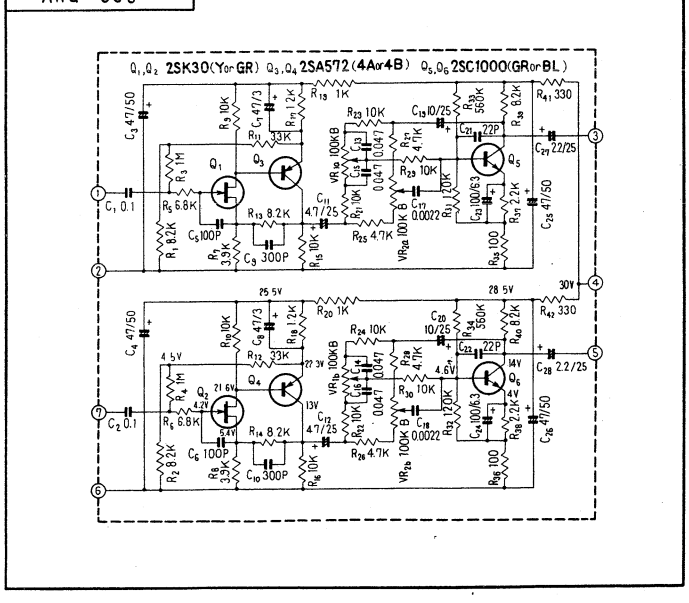

37

MAIN AMP UNIT

MAIN AMP UNIT
AWH-002

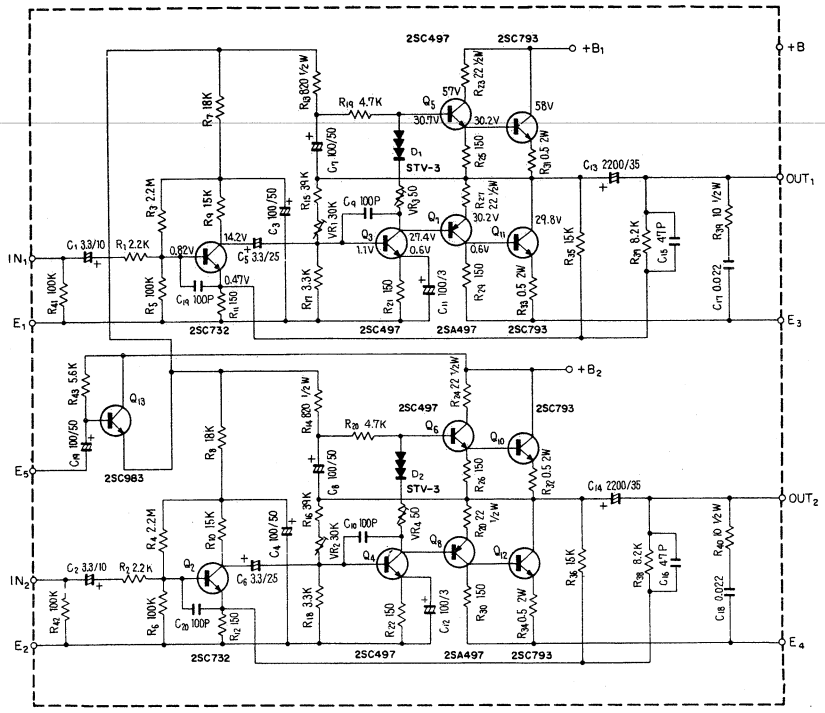

POWER SUPPLY UNIT

POWER SUPPLY UNIT
AWR-006

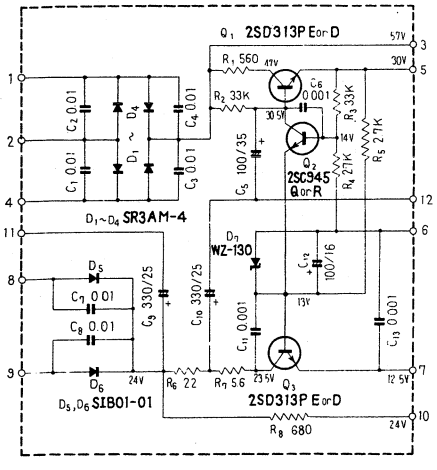

SWITCH UNIT

SWITCH UNIT
AWS-013

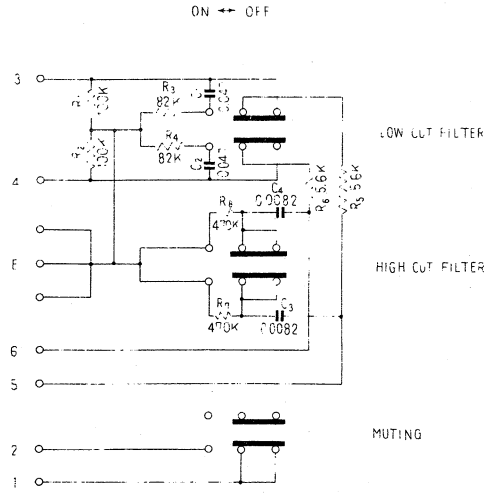

Model SX-700T, SX-700Ⓕ

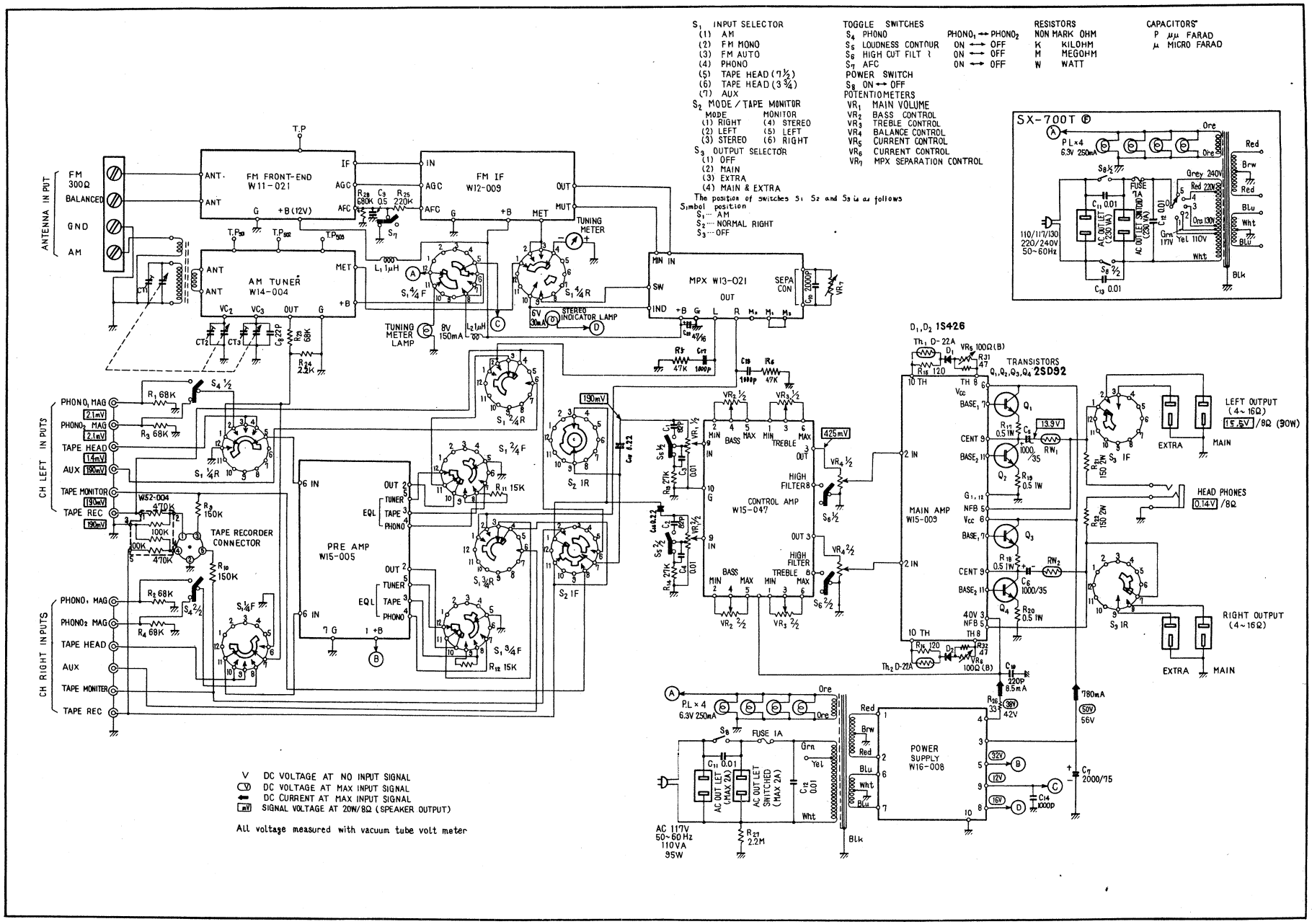

39

AM TUNER UNIT W14-004

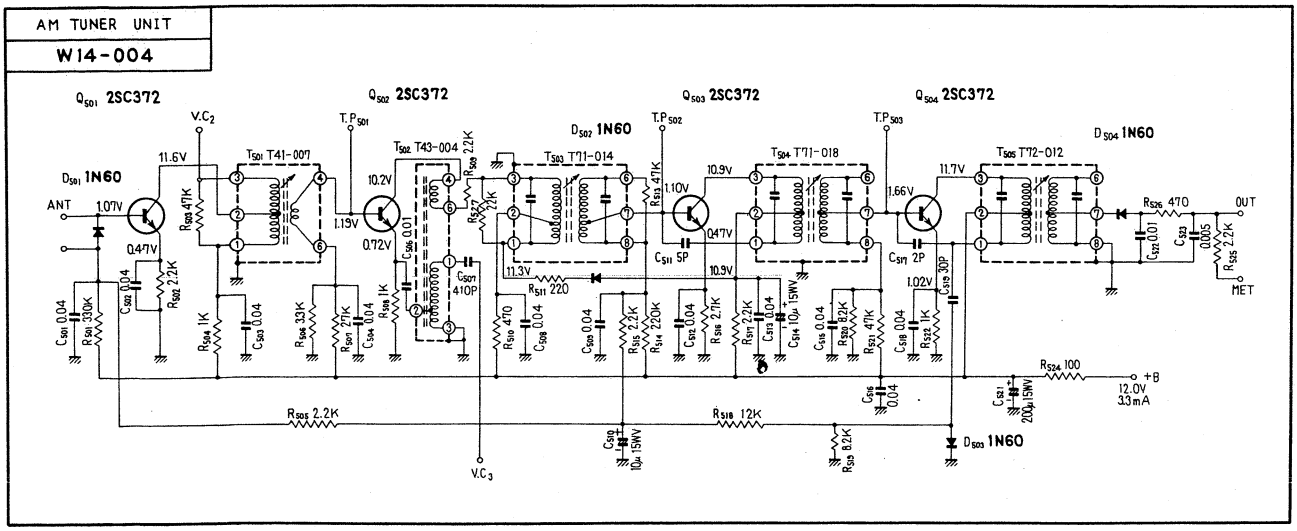

FM FRONTEND W11-021

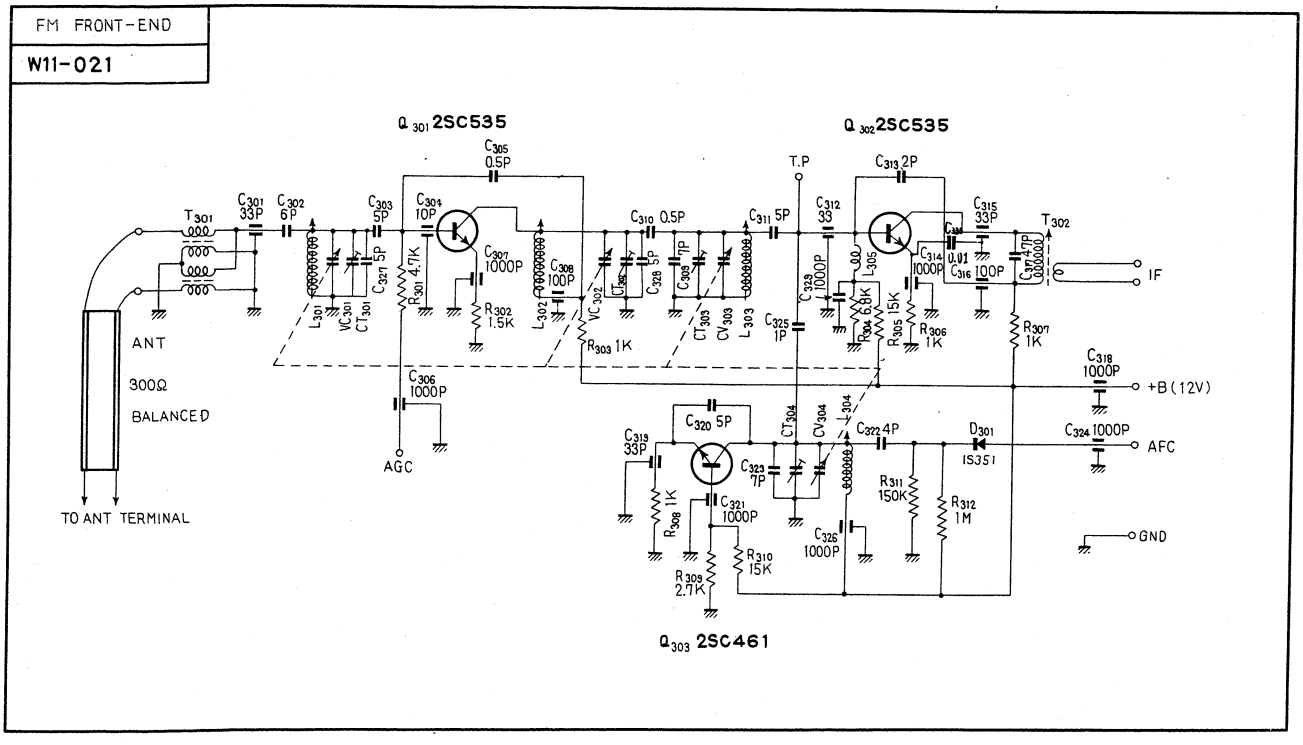

40

FM IF UNIT W12-009

FM IF UNIT
W12-009

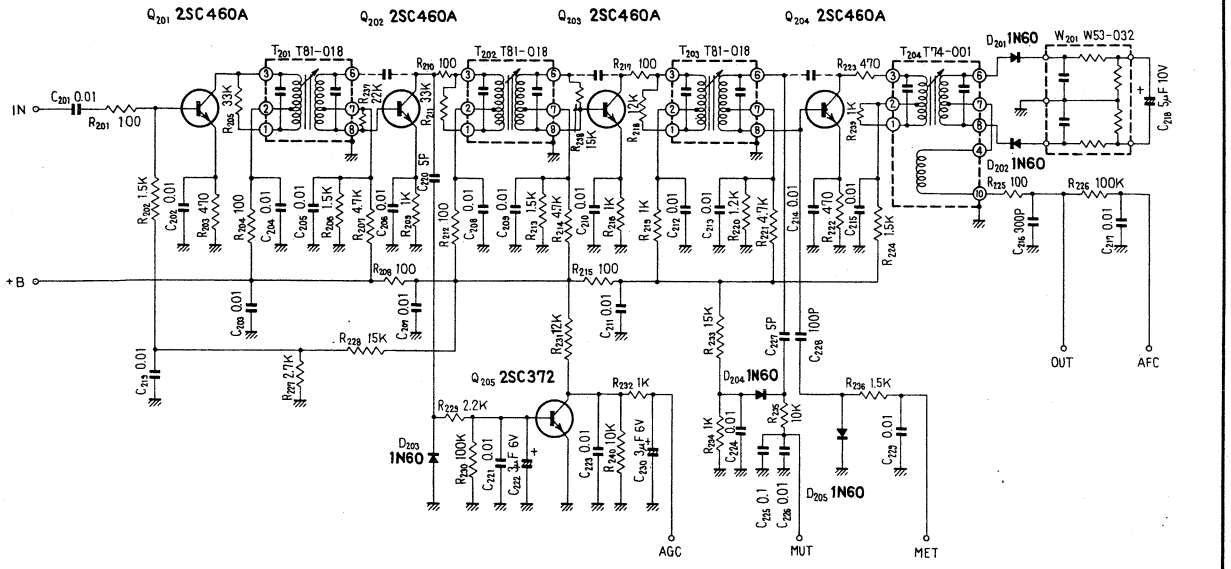

MPX UNIT W13-021

MPX UNIT
W13-021

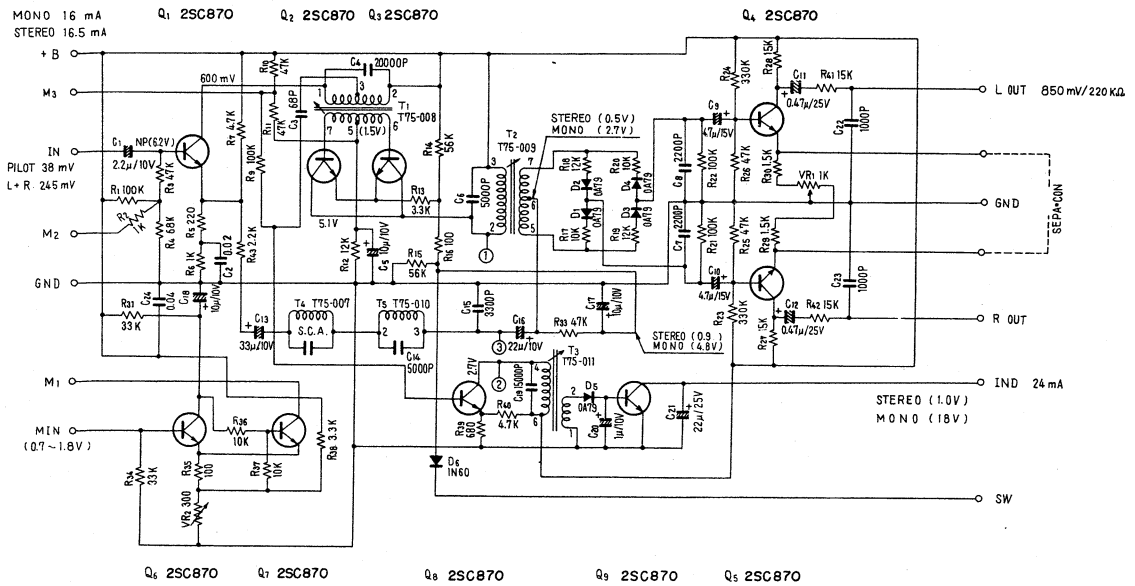

PRE AMP UNIT W15-005

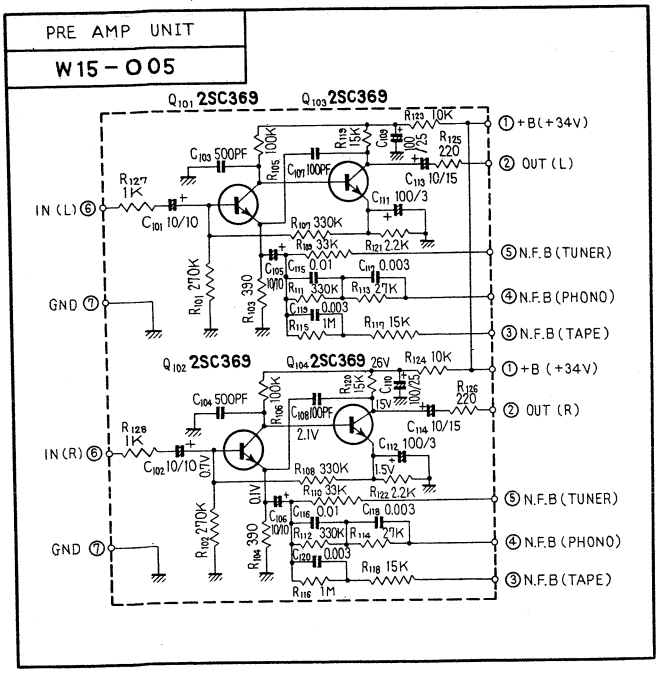

CONTROL AMP UNIT W15-047

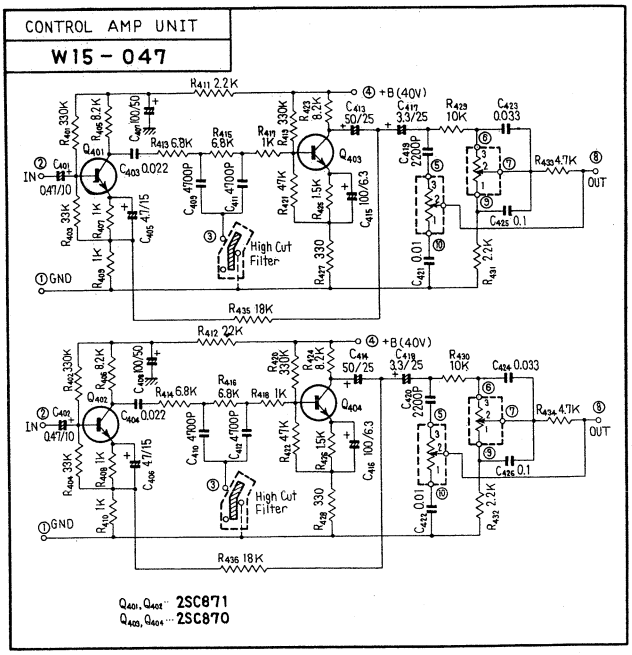

MAIN AMP UNIT W15-009

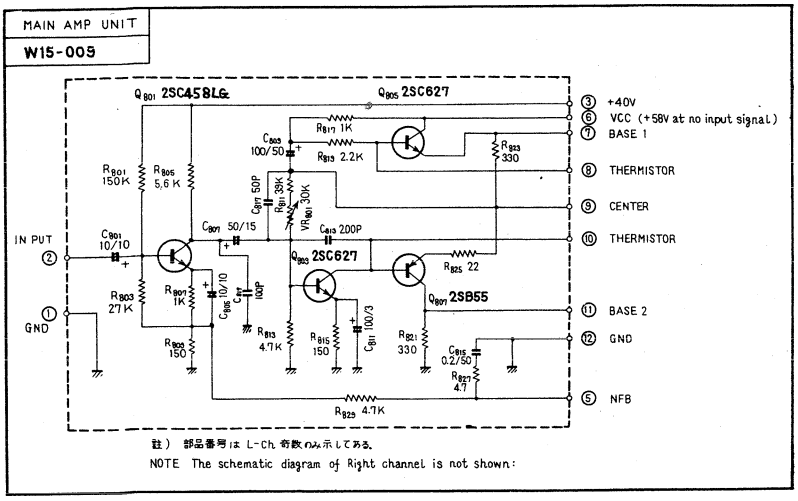

註） 部品番号は L-ch 奇数のみ示してある。
NOTE The schematic diagram of Right channel is not shown.

POWER SUPPLY UNIT W16-008

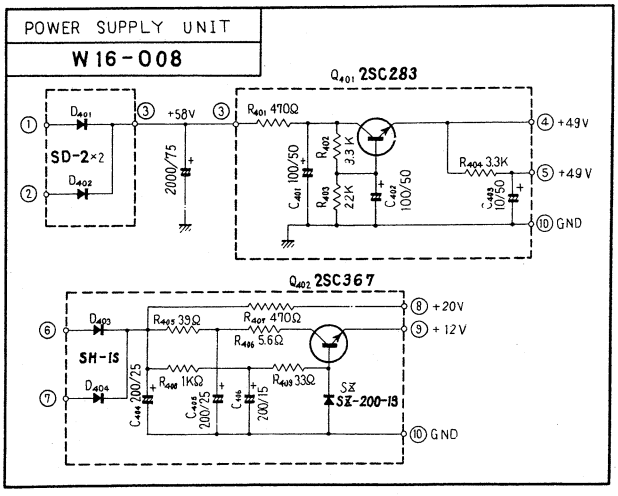

42

NOTE:

If your set is provided with the CONTROL AMP UNIT and the FILTER UNIT separately, refer to the following circuit diagrams.

CONTROL AMP UNIT W15-006

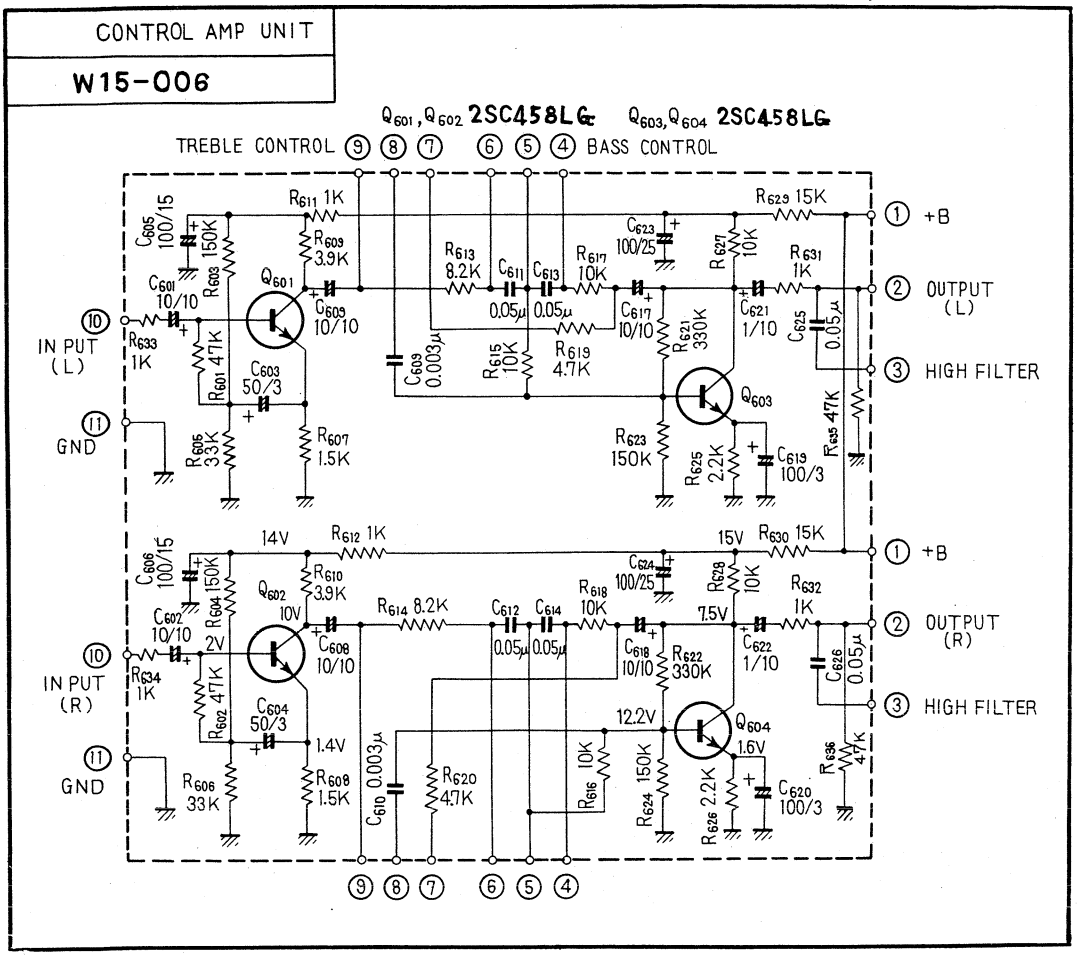

P.T.F. UNIT W15-010

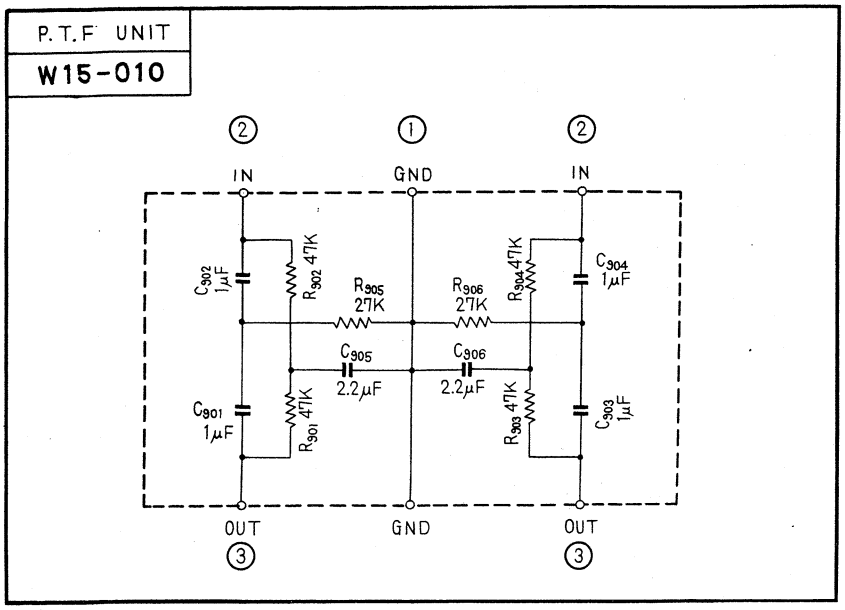

43

SX-770 KCLW, FVW model

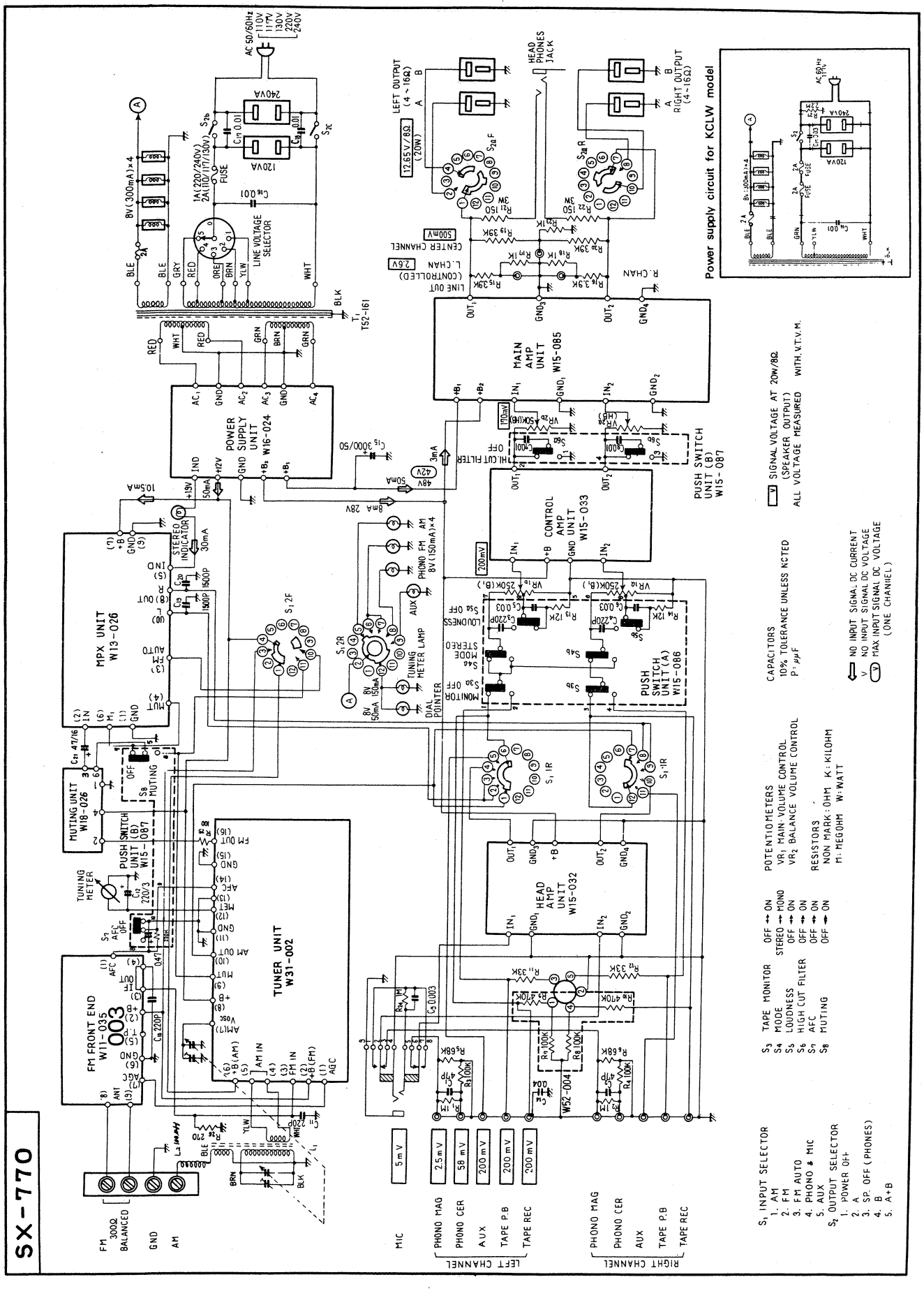

FM FRONT END

FM FRONT END
W11-035

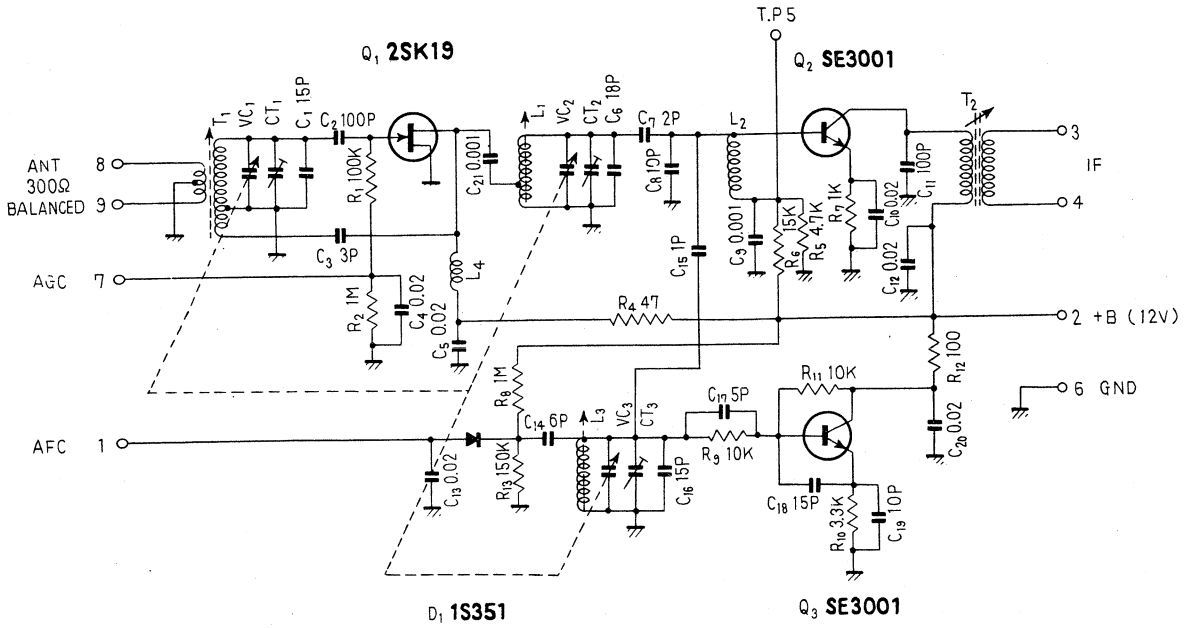

FM FRONT END for FVZW model

FM FRONT END
AWB-003

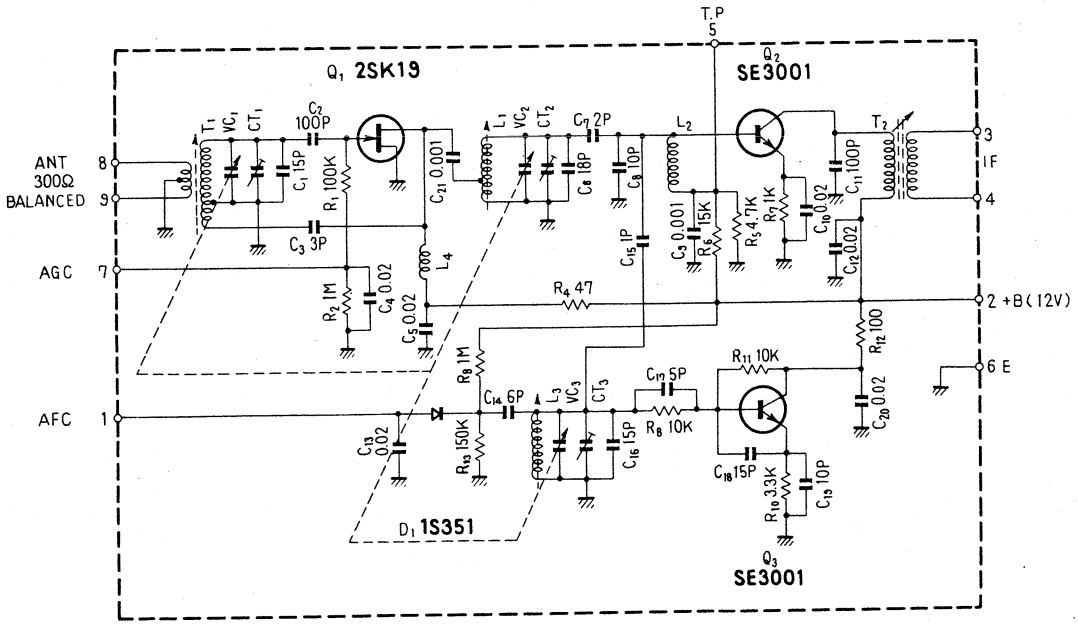

TUNER UNIT

TUNER UNIT
W31 - 002

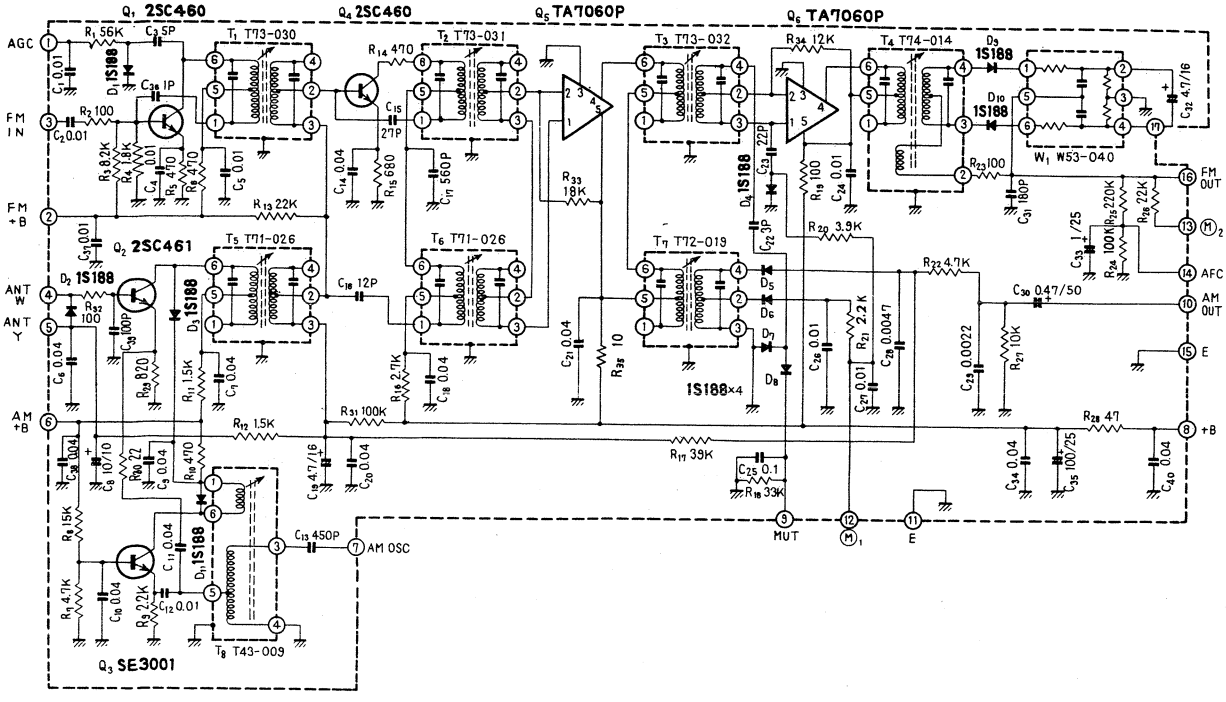

MPX UNIT

MPX UNIT
W 13-026

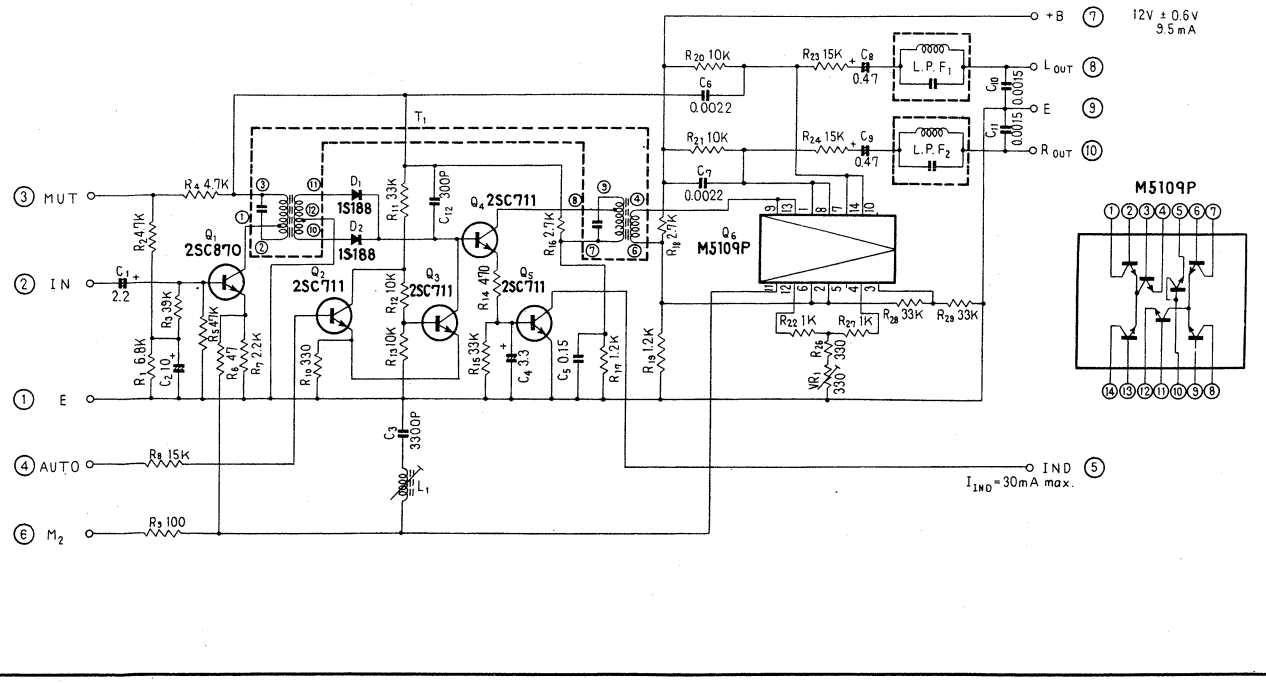

46

MUTING UNIT

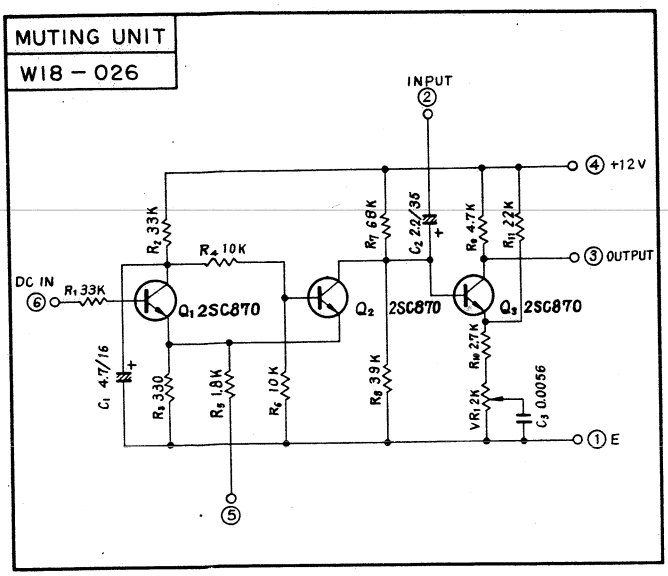

HEAD AMP UNIT

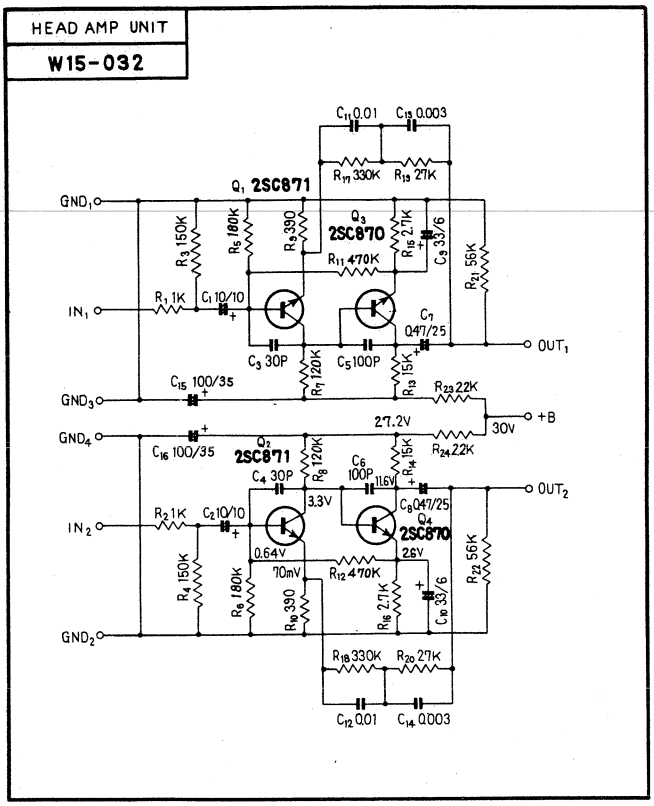

CONTROL AMP UNIT

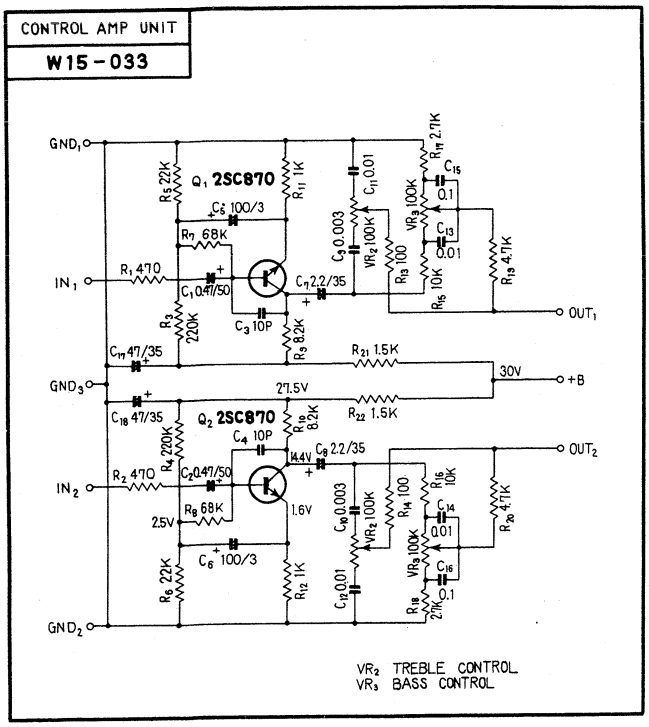

47

MAIN AMP UNIT

MAIN AMP UNIT
W15-085

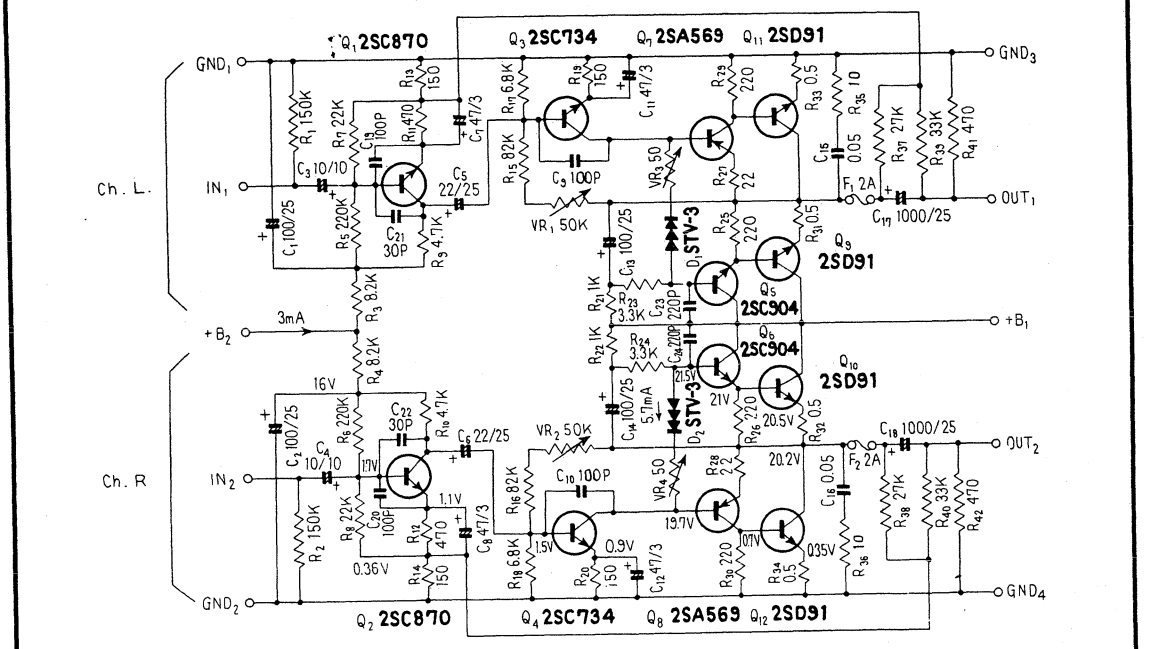

MAIN AMP UNIT For NBW model

MAIN AMP UNIT
W23-005

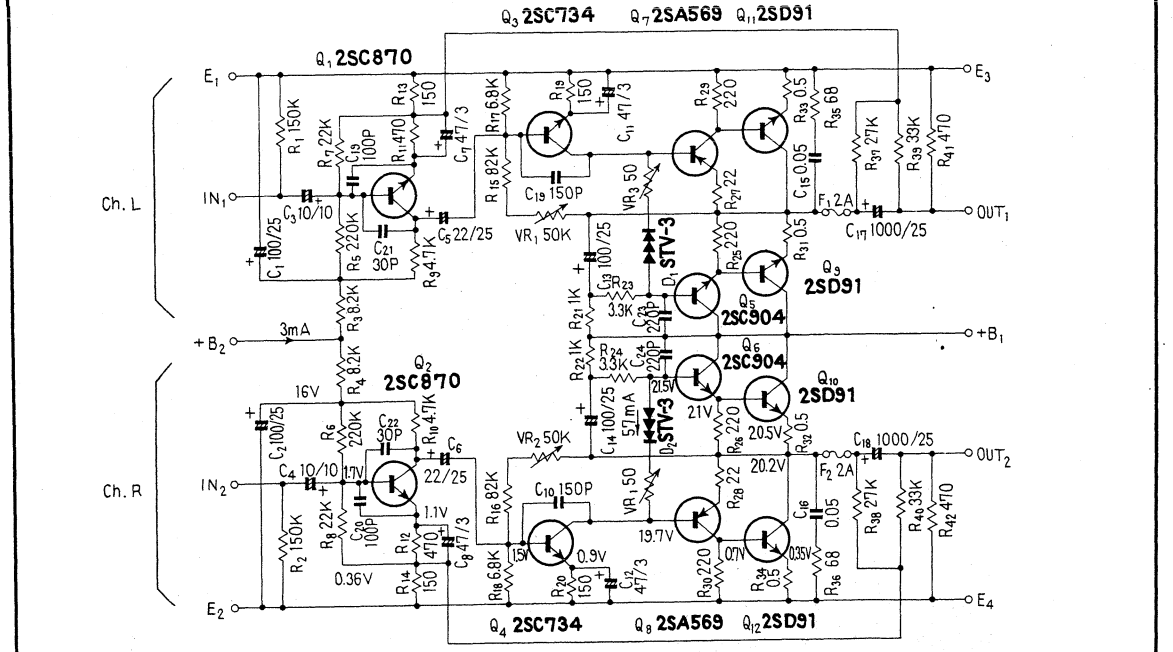

48

PUSH SWITCH UNIT

PUSH SWITCH UNIT (A)
W15 - 086

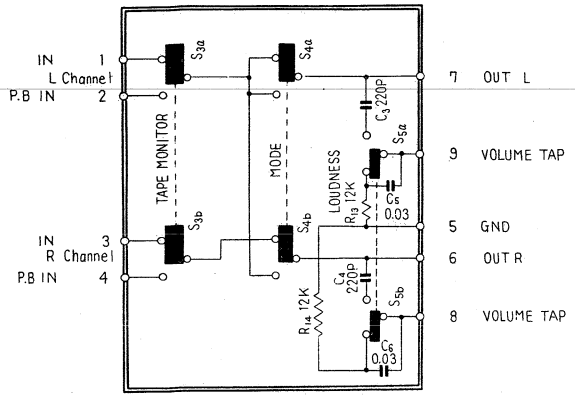

PUSH SWITCH UNIT

PUSH SWITCH UNIT (B)
W15 - 087

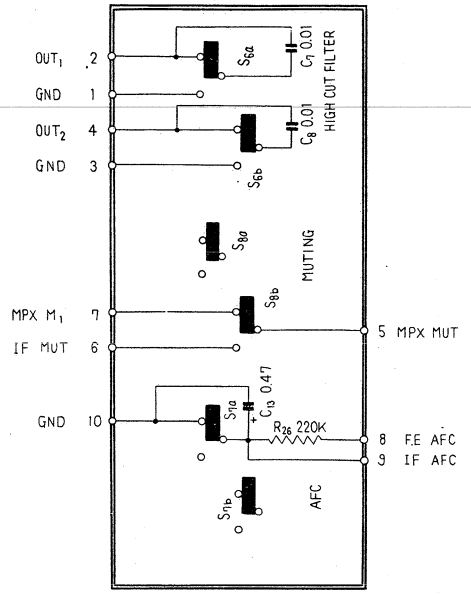

POWER SUPPLY UNIT

POWER SUPPLY UNIT
W16 - 024

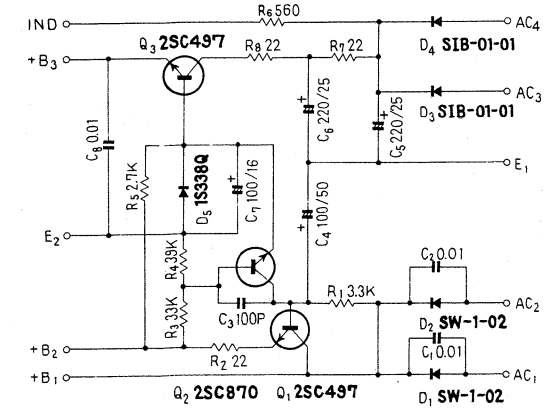

POWER SUPPLY UNIT for NBW model

POWER SUPPLY UNIT
W16 - 064

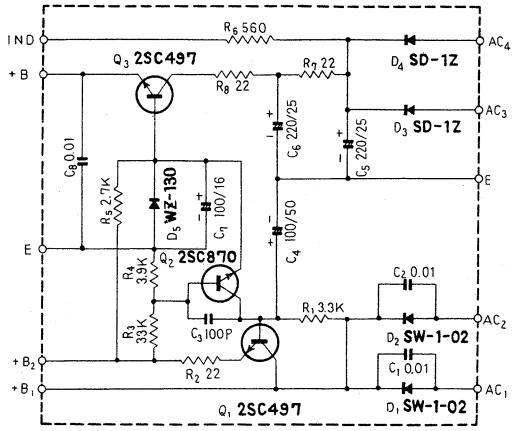

SX-990 for FVZW model

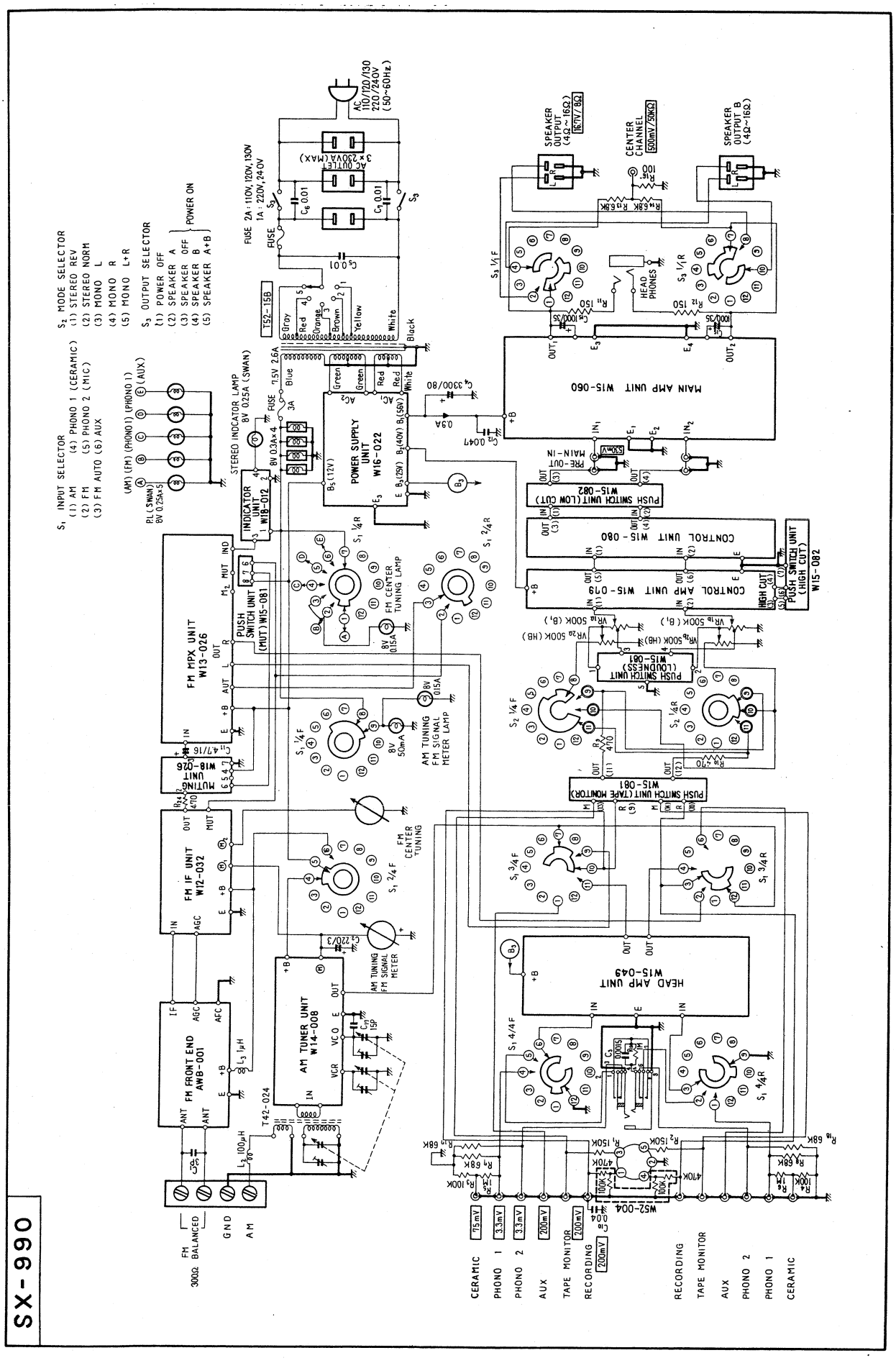

50

SX-990 for NBW model

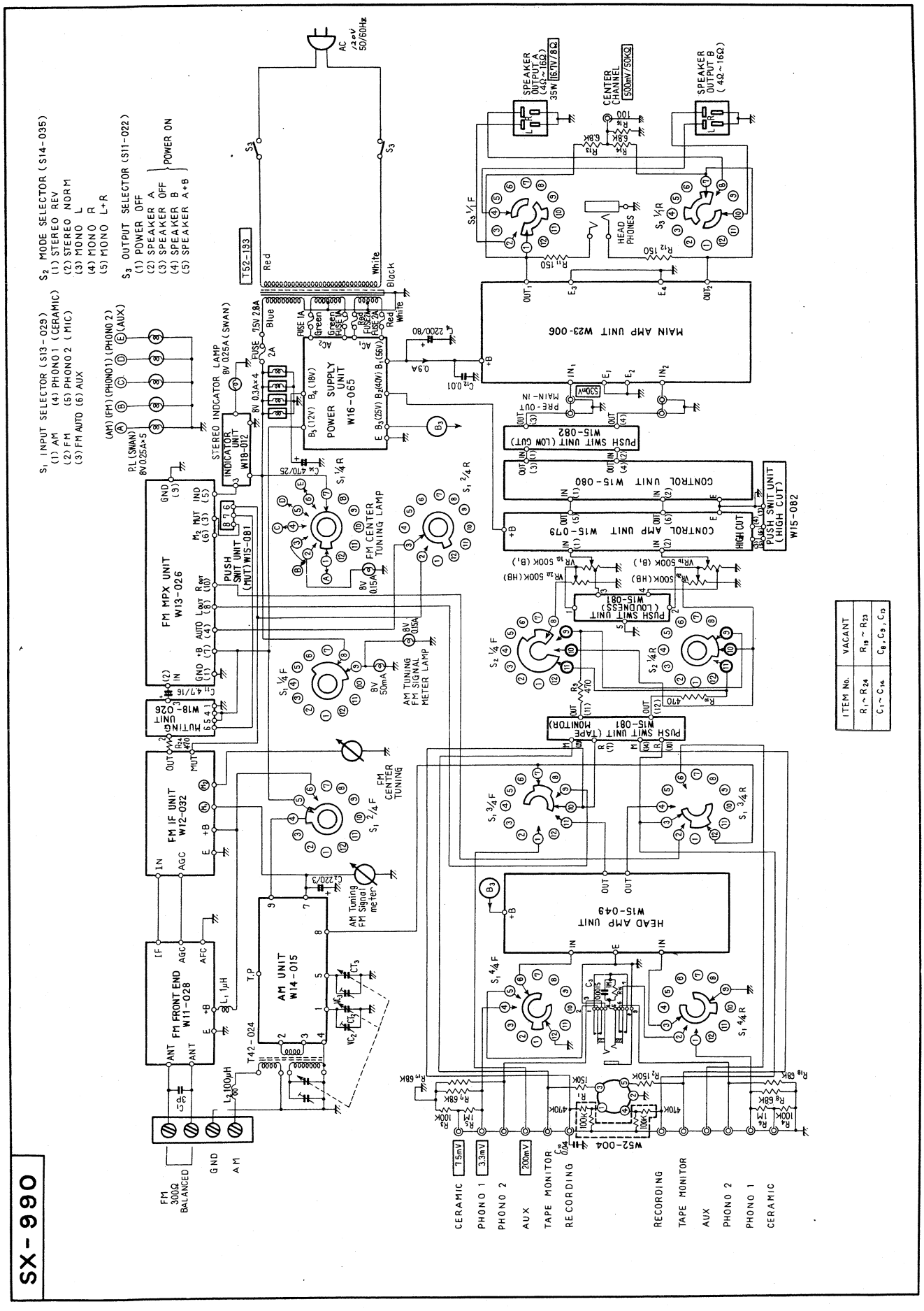

FM FRONT END for FVZW model

FM FRONT END
AWB-001

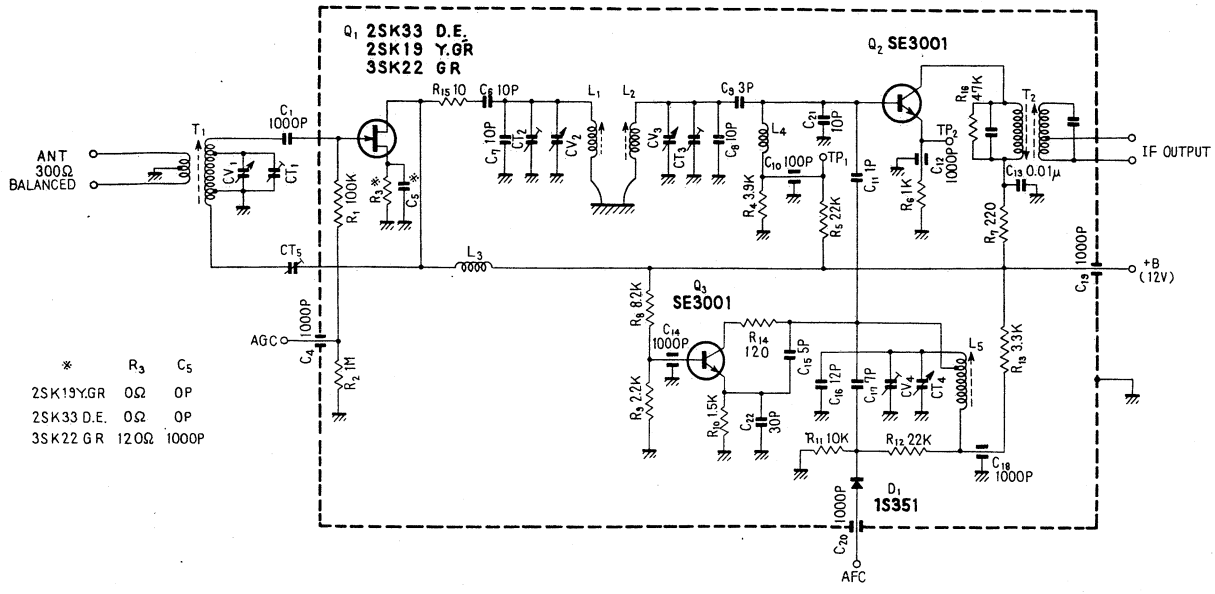

FM IF UNIT

FM IF UNIT
W12-031

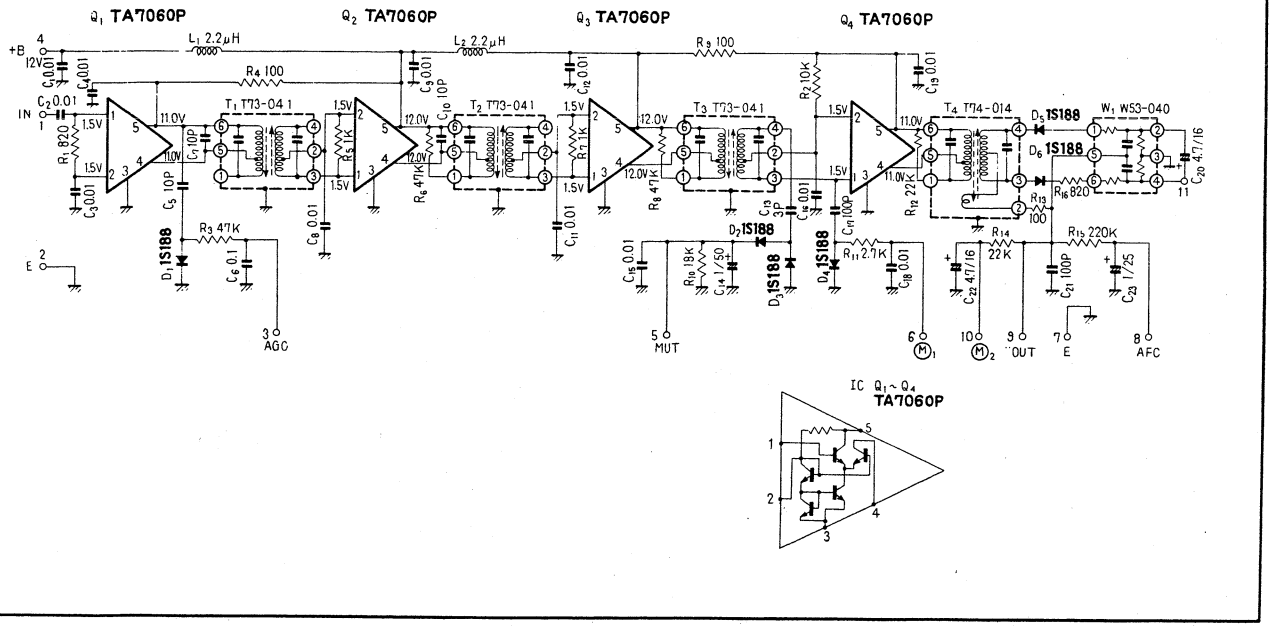

FM IF UNIT for FVW, FVZW, KCW, KUW, NBW model

FM IF UNIT
W12-032

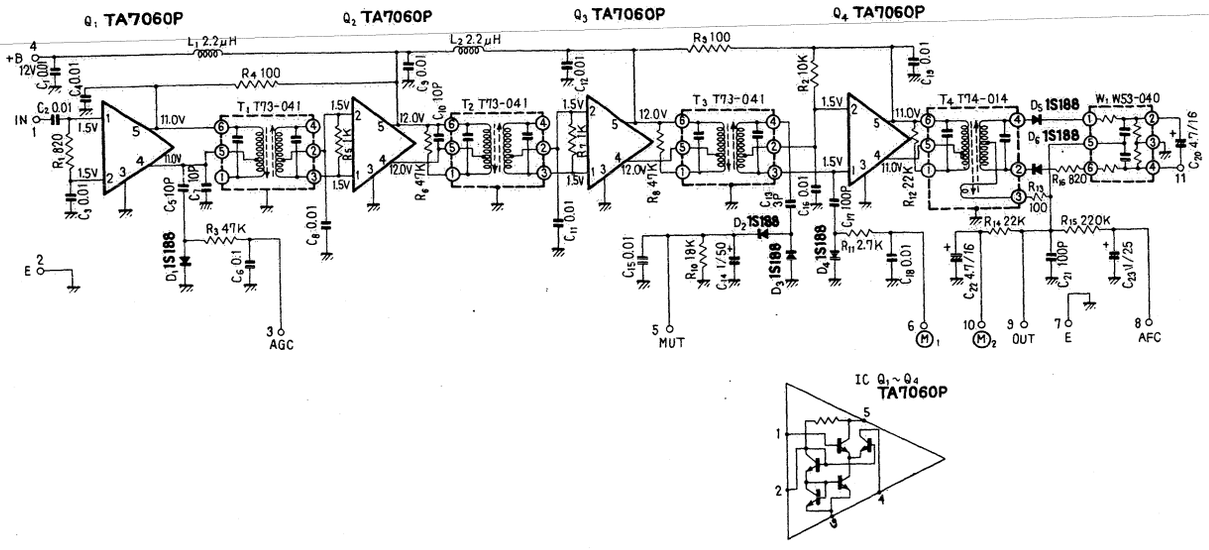

MPX UNIT

MPX UNIT
W13-026

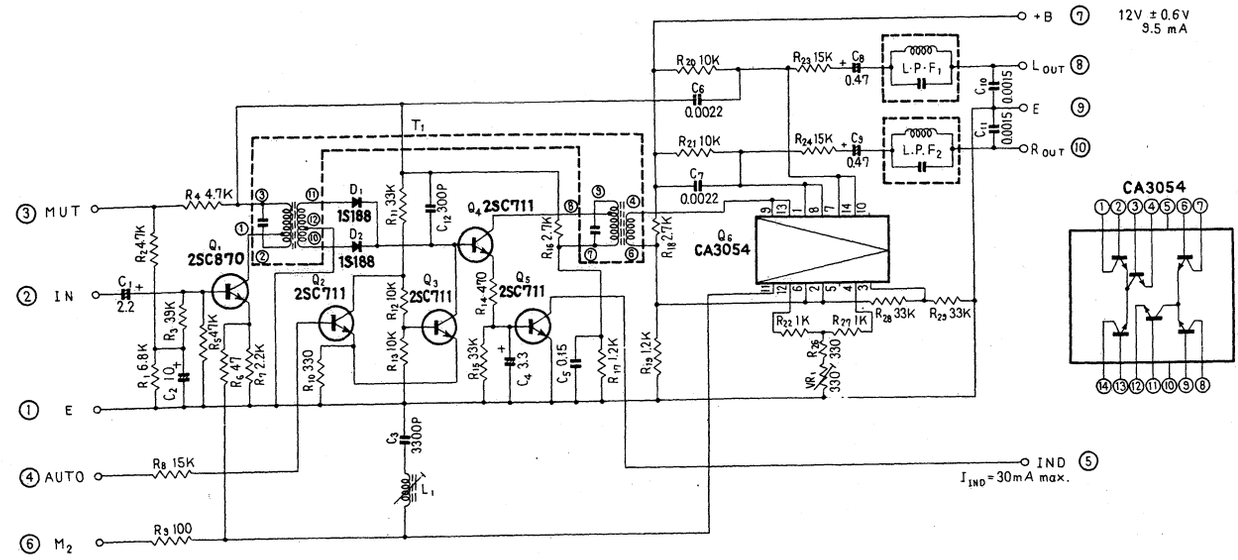

53

AM TUNER UNIT

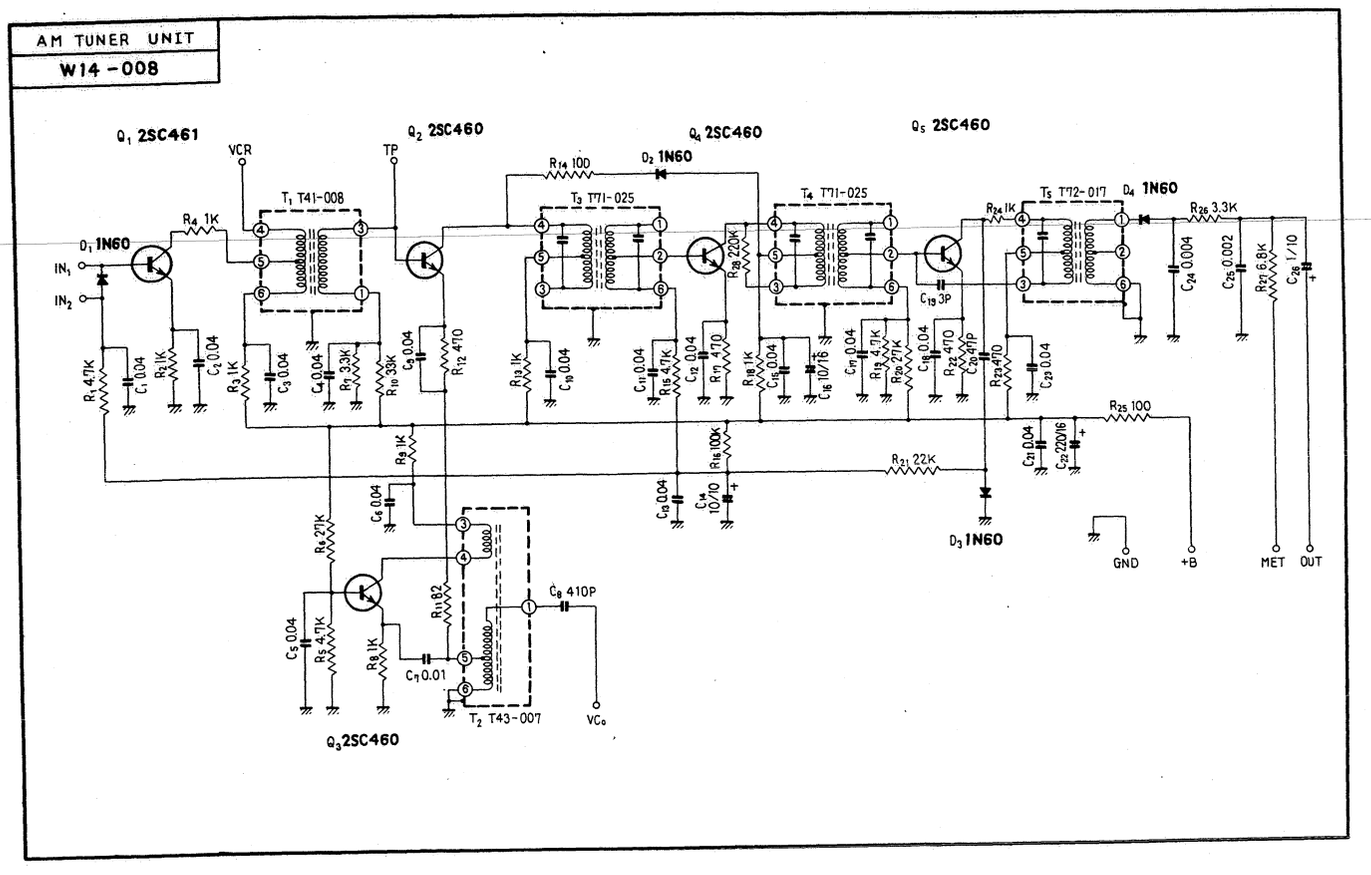

AM TUNER UNIT for NBW model

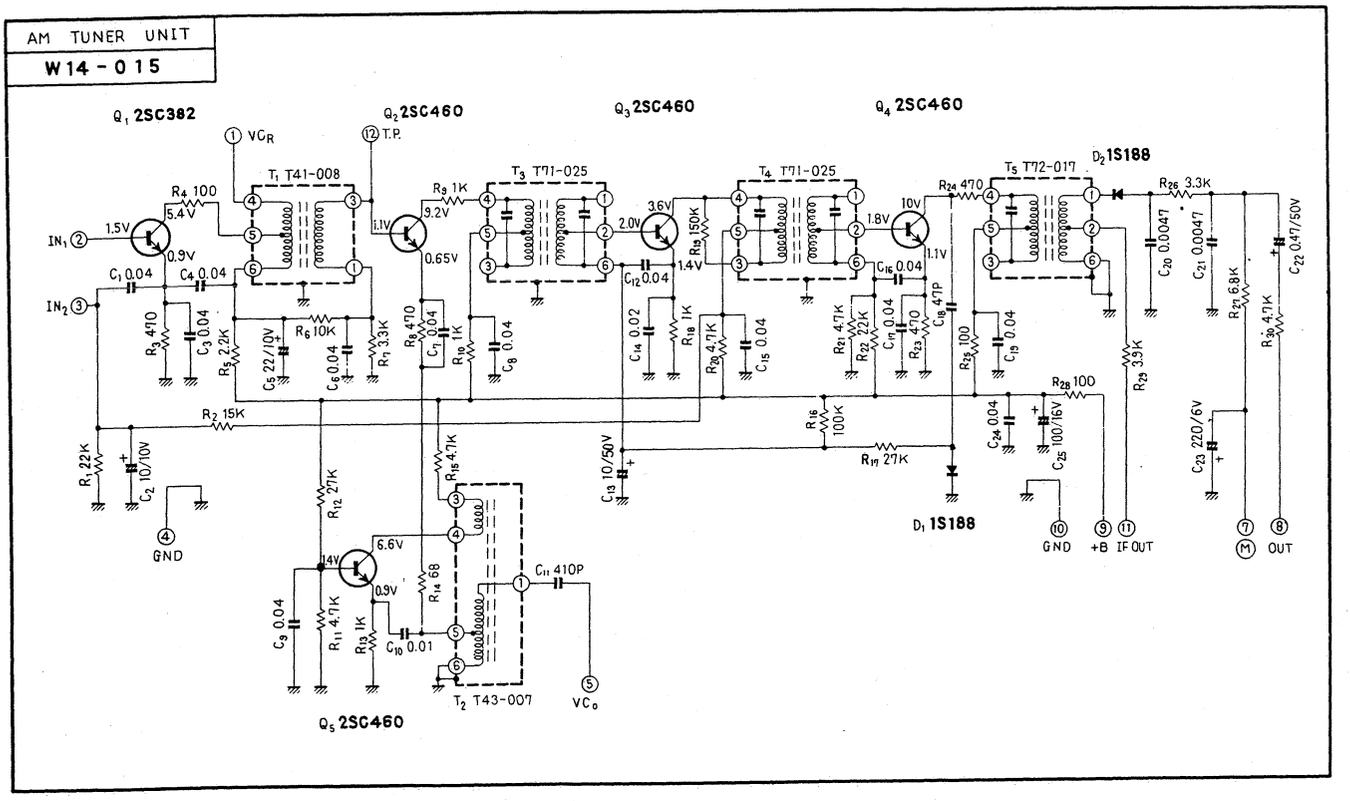

MUTING UNIT

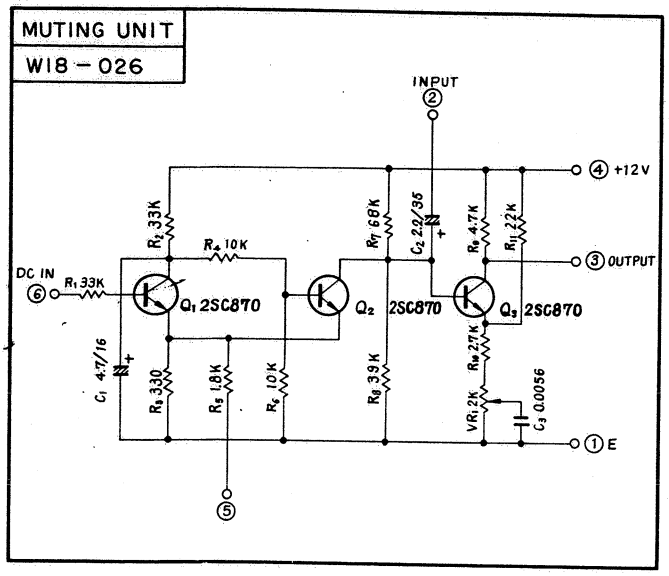

HEAD AMP UNIT

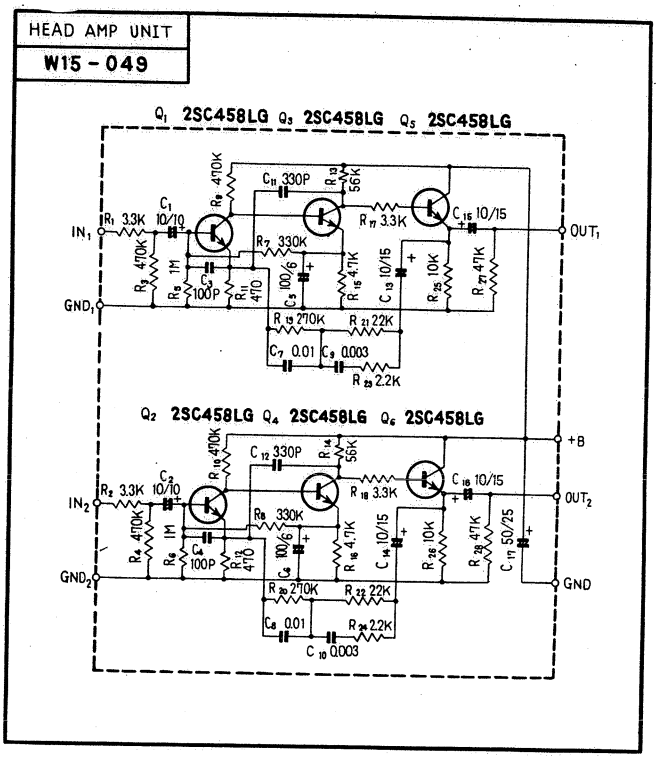

CONTROL AMP UNIT

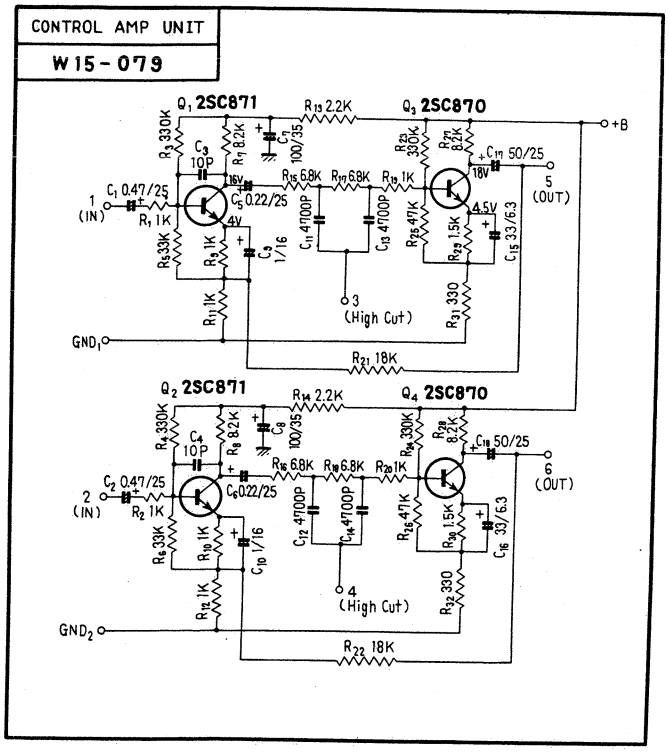

CONTROL UNIT

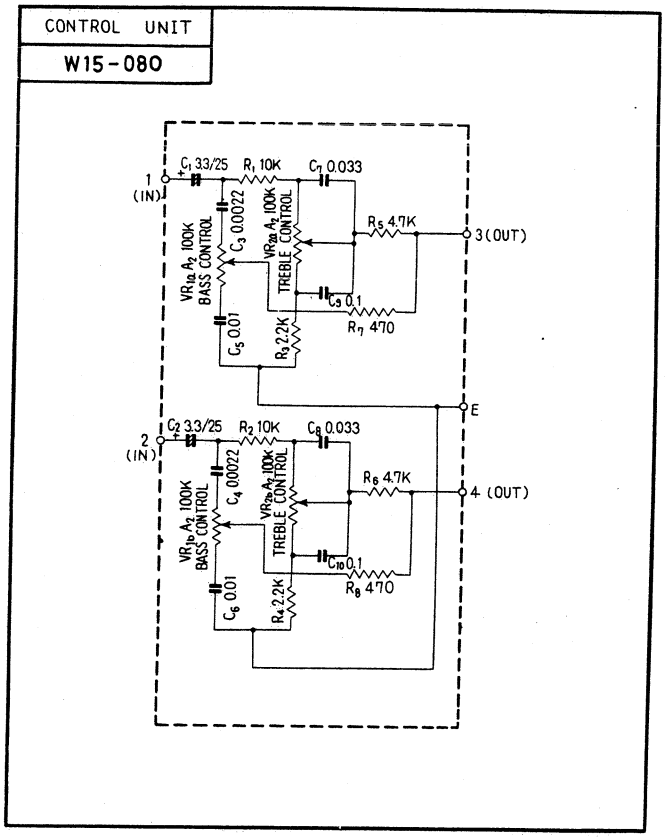

55

MAIN AMP UNIT

MAIN AMP UNIT
W15-060

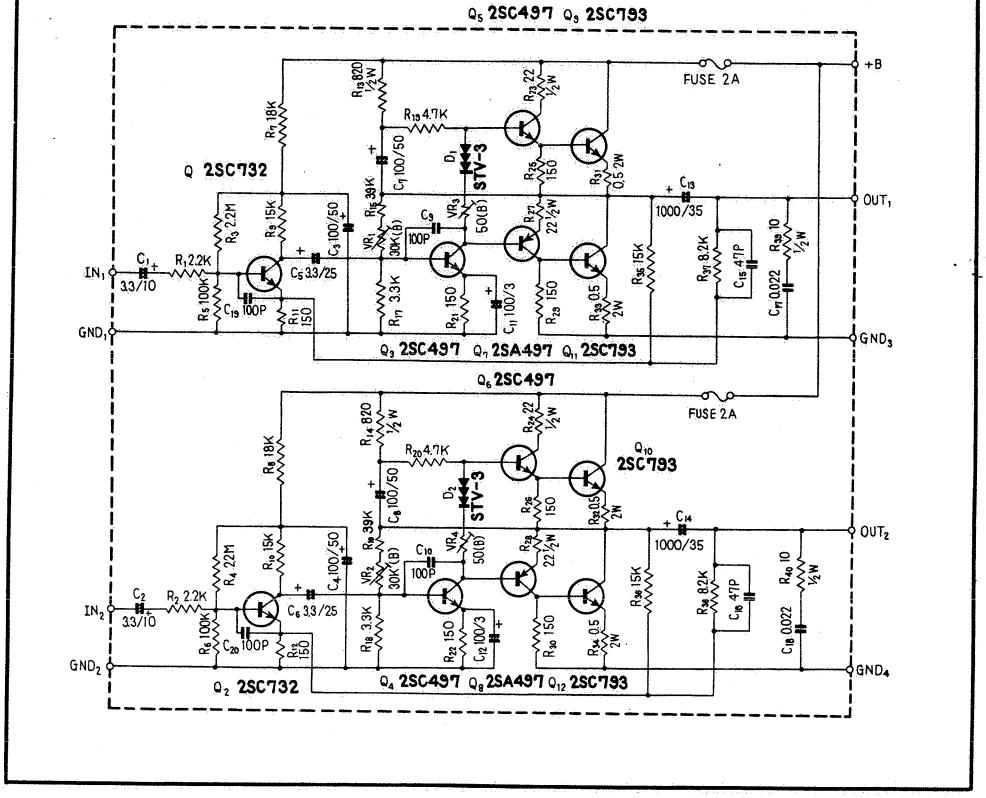

MAIN AMP UNIT for NBW model

MAIN AMP UNIT
W23-006

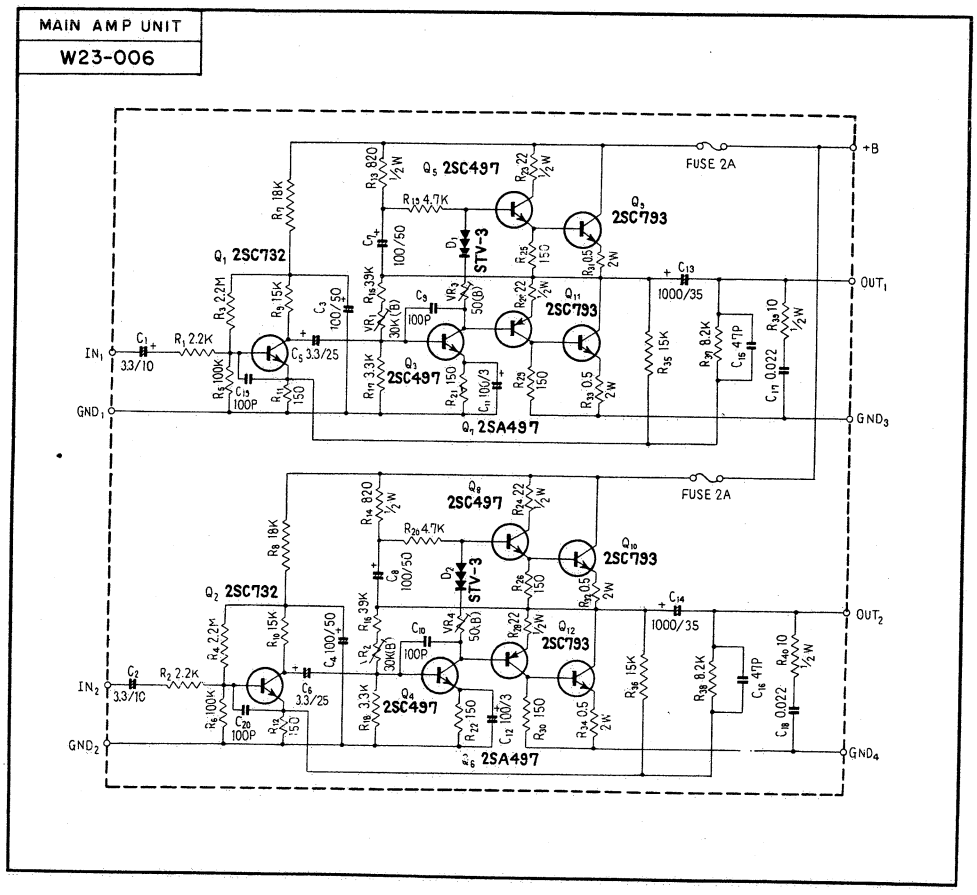

INDICATOR UNIT

INDICATOR UNIT
W18 - 012

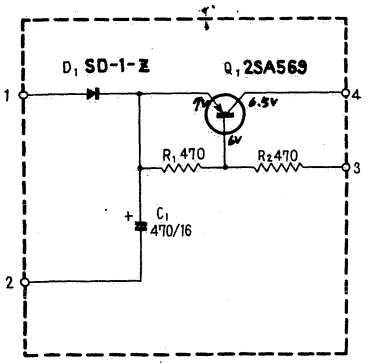

PUSH SWITCH UNIT

PUSH SWITCH UNIT
W15 - 081

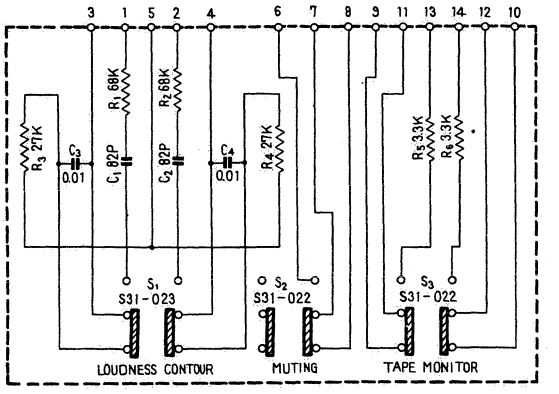

PUSH SWITCH UNIT

PUSH SWITCH UNIT
W15 - 082

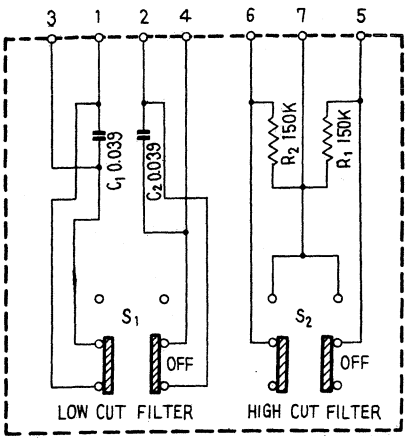

POWER SUPPLY UNIT

POWER SUPPLY UNIT
W16 - 022

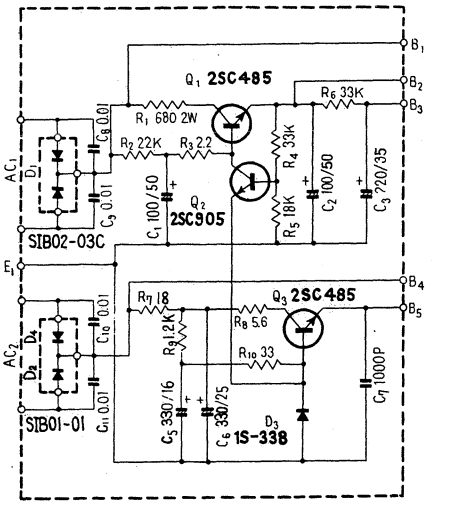

57

SX-1000T

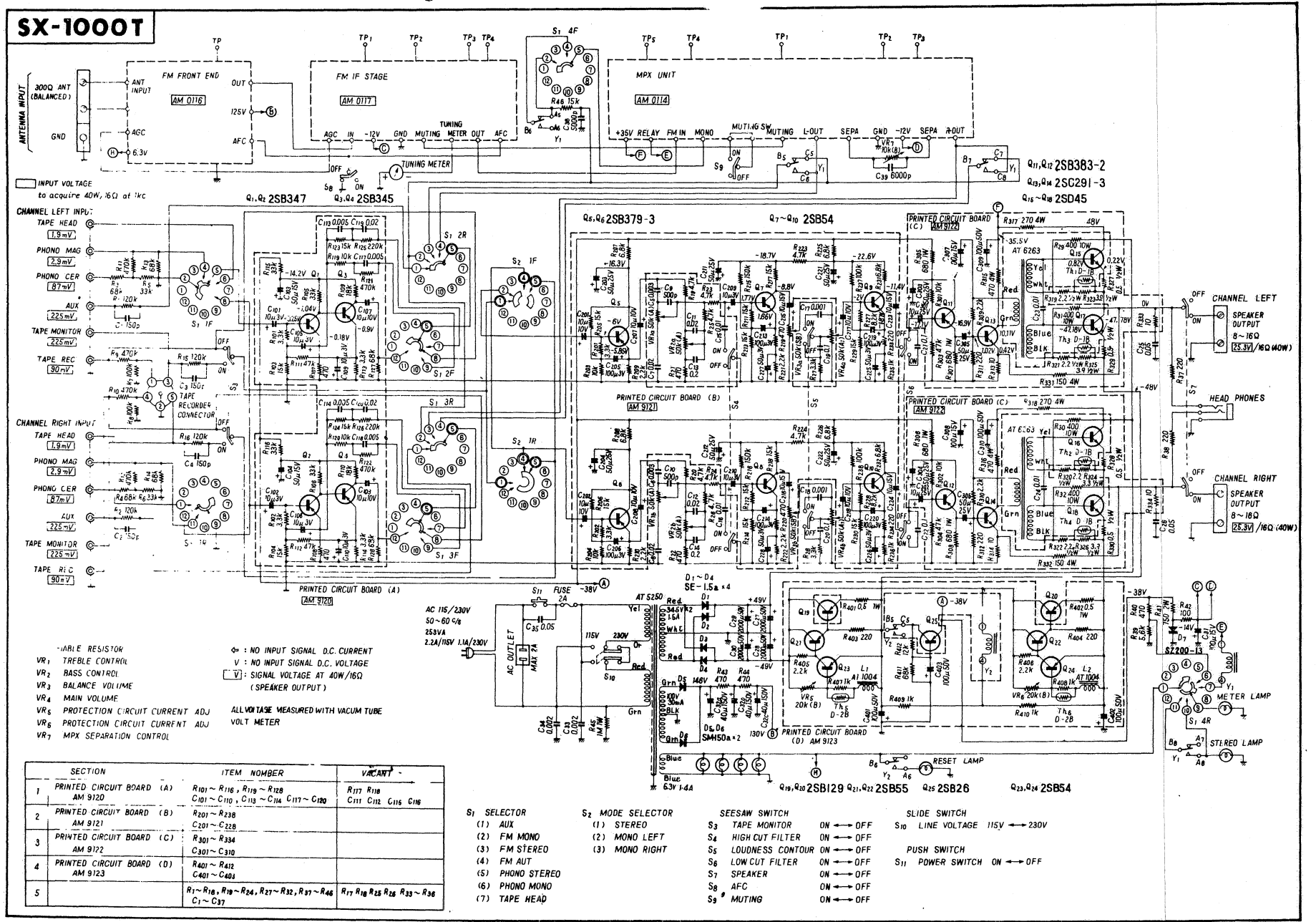

VARIABLE RESISTOR
- VR_1 TREBLE CONTROL
- VR_2 BASS CONTROL
- VR_3 BALANCE VOLUME
- VR_4 MAIN VOLUME
- VR_5 PROTECTION CIRCUIT CURRENT ADJ
- VR_6 PROTECTION CIRCUIT CURRENT ADJ
- VR_7 MPX SEPARATION CONTROL

⇦ : NO INPUT SIGNAL D.C. CURRENT
V : NO INPUT SIGNAL D.C. VOLTAGE
[V] : SIGNAL VOLTAGE AT 40W/16Ω (SPEAKER OUTPUT)

ALL VOLTAGE MEASURED WITH VACUM TUBE VOLT METER

	SECTION	ITEM NUMBER	VACANT
1	PRINTED CIRCUIT BOARD (A) AM 9120	R_{101}~R_{116}, R_{119}~R_{128} C_{101}~C_{110}, C_{113}~C_{114}, C_{117}~C_{120}	R_{117} R_{118} C_{111} C_{112} C_{115} C_{116}
2	PRINTED CIRCUIT BOARD (B) AM 9121	R_{201}~R_{238} C_{201}~C_{228}	
3	PRINTED CIRCUIT BOARD (C) AM 9122	R_{301}~R_{334} C_{301}~C_{310}	
4	PRINTED CIRCUIT BOARD (D) AM 9123	R_{401}~R_{412} C_{401}~C_{403}	
5		R_1~R_{18}, R_{19}~R_{24}, R_{27}~R_{32}, R_{37}~R_{46} C_1~C_{37}	R_{17} R_{18} R_{25} R_{26} R_{33}~R_{36}

S_1 SELECTOR
- (1) AUX
- (2) FM MONO
- (3) FM STEREO
- (4) FM AUT
- (5) PHONO STEREO
- (6) PHONO MONO
- (7) TAPE HEAD

S_2 MODE SELECTOR
- (1) STEREO
- (2) MONO LEFT
- (3) MONO RIGHT

SEESAW SWITCH
- S_3 TAPE MONITOR ON ⟷ OFF
- S_4 HIGH CUT FILTER ON ⟷ OFF
- S_5 LOUDNESS CONTOUR ON ⟷ OFF
- S_6 LOW CUT FILTER ON ⟷ OFF
- S_7 SPEAKER ON ⟷ OFF
- S_8 AFC ON ⟷ OFF
- S_9 MUTING ON ⟷ OFF

SLIDE SWITCH
- S_{10} LINE VOLTAGE 115V ⟷ 230V

PUSH SWITCH
- S_{11} POWER SWITCH ON ⟷ OFF

AM0116 FM FRONT END

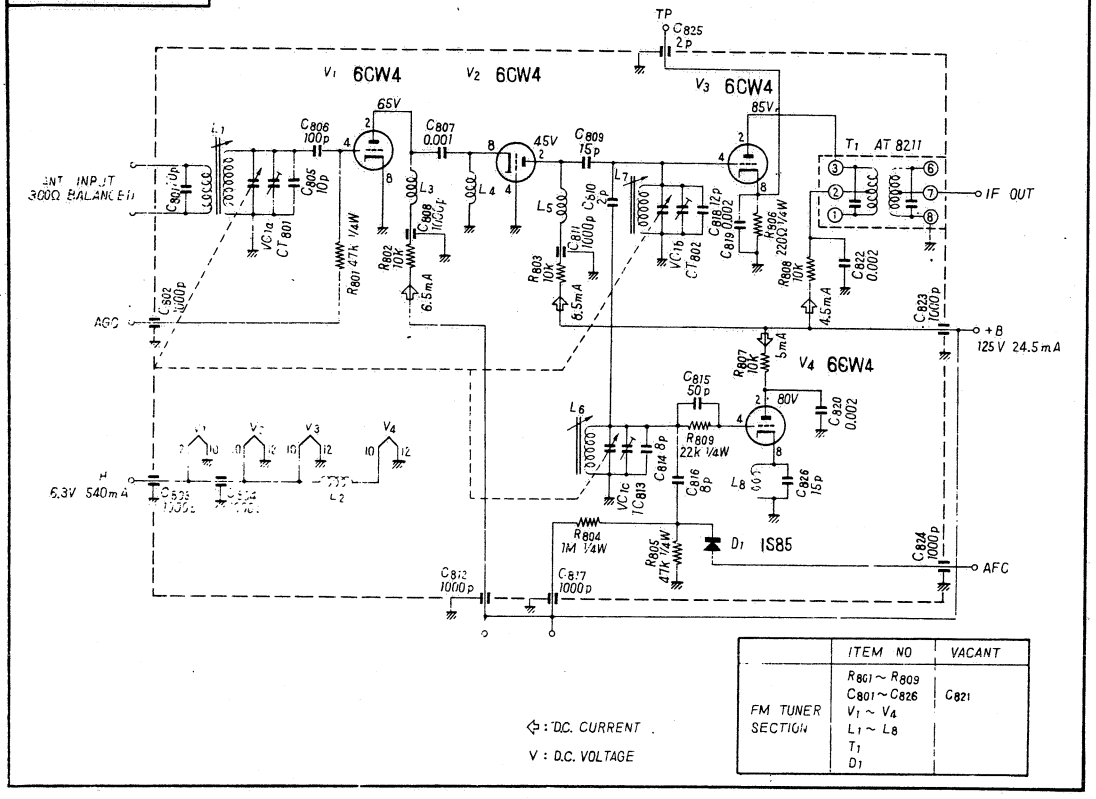

	ITEM NO	VACANT
FM TUNER SECTION	$R_{801} \sim R_{809}$ $C_{801} \sim C_{826}$ $V_1 \sim V_4$ $L_1 \sim L_8$ T_1 D_1	C_{821}

⇦ : D.C. CURRENT
V : D.C. VOLTAGE

AM0114 MPX UNIT

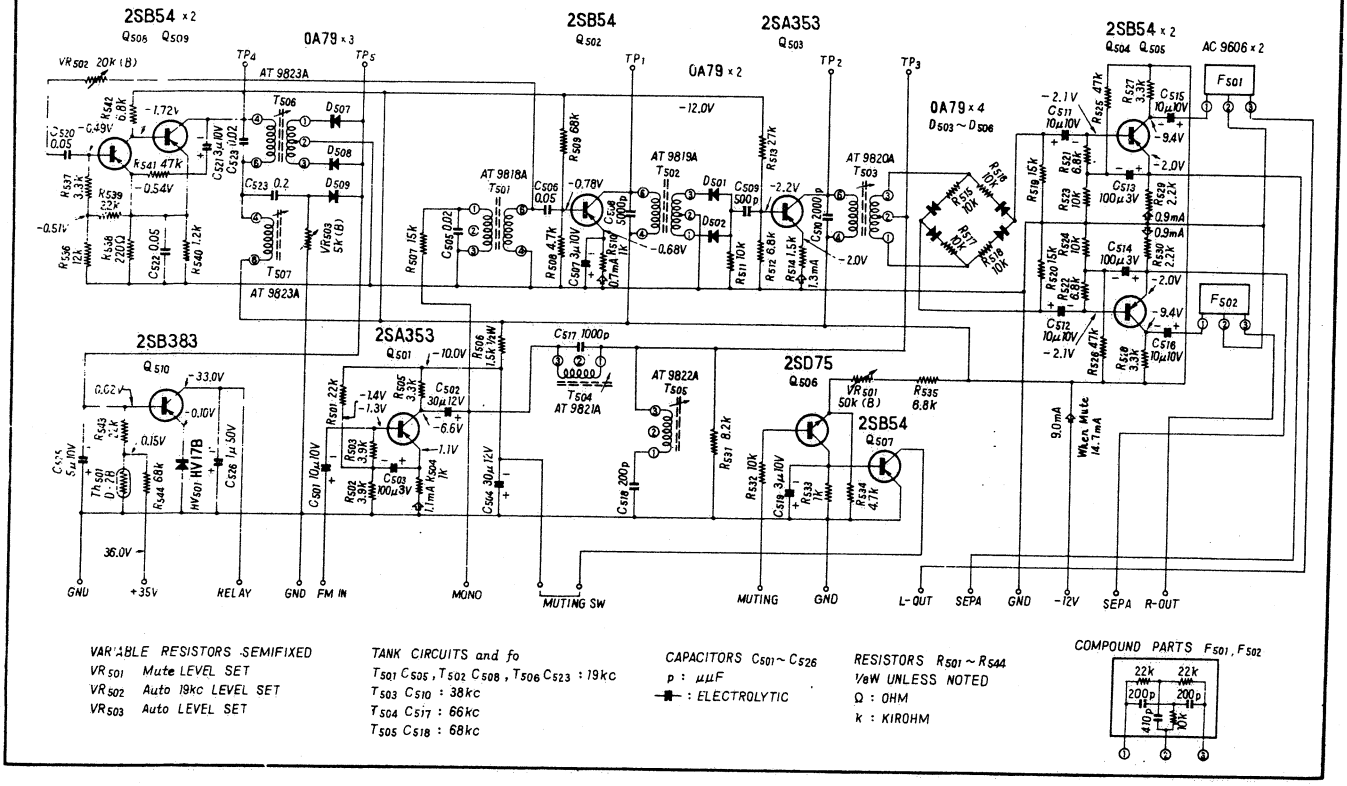

VARIABLE RESISTORS SEMIFIXED
VR_{501} Mute LEVEL SET
VR_{502} Auto 19kc LEVEL SET
VR_{503} Auto LEVEL SET

TANK CIRCUITS and fo
T_{501} C_{505}, T_{502} C_{508}, T_{506} C_{523} : 19kc
T_{503} C_{510} : 38kc
T_{504} C_{517} : 66kc
T_{505} C_{518} : 68kc

CAPACITORS $C_{501} \sim C_{526}$
p : μμF
—||— : ELECTROLYTIC

RESISTORS $R_{501} \sim R_{544}$
1/6W UNLESS NOTED
Ω : OHM
k : KIROHM

COMPOUND PARTS F_{501}, F_{502}

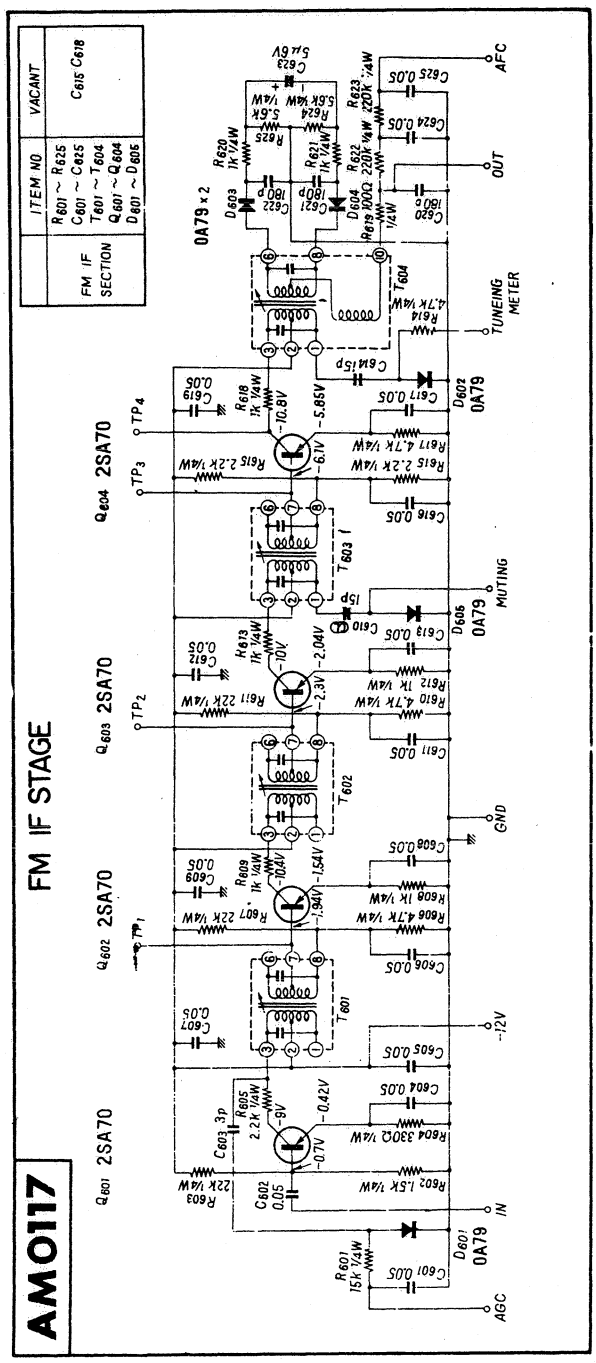
AM0117
FM IF STAGE
FM IF SECTION
ITEM NO
R601 ~ R625
C601 ~ C625
T601 ~ T604
Q601 ~ Q604
D601 ~ D605
VACANT
C615 C618
Q601 2SA70
Q602 2SA70
Q603 2SA70
Q604 2SA70
0A79 x 2
D603
D604
D601 0A79
D602 0A79
D605 0A79
T601
T602
T603
T604
TP1
TP2
TP3
TP4
AFC
OUT
TUNEING METER
MUTING
GND
-12V
IN
AGC

60

Model SX-1000TA

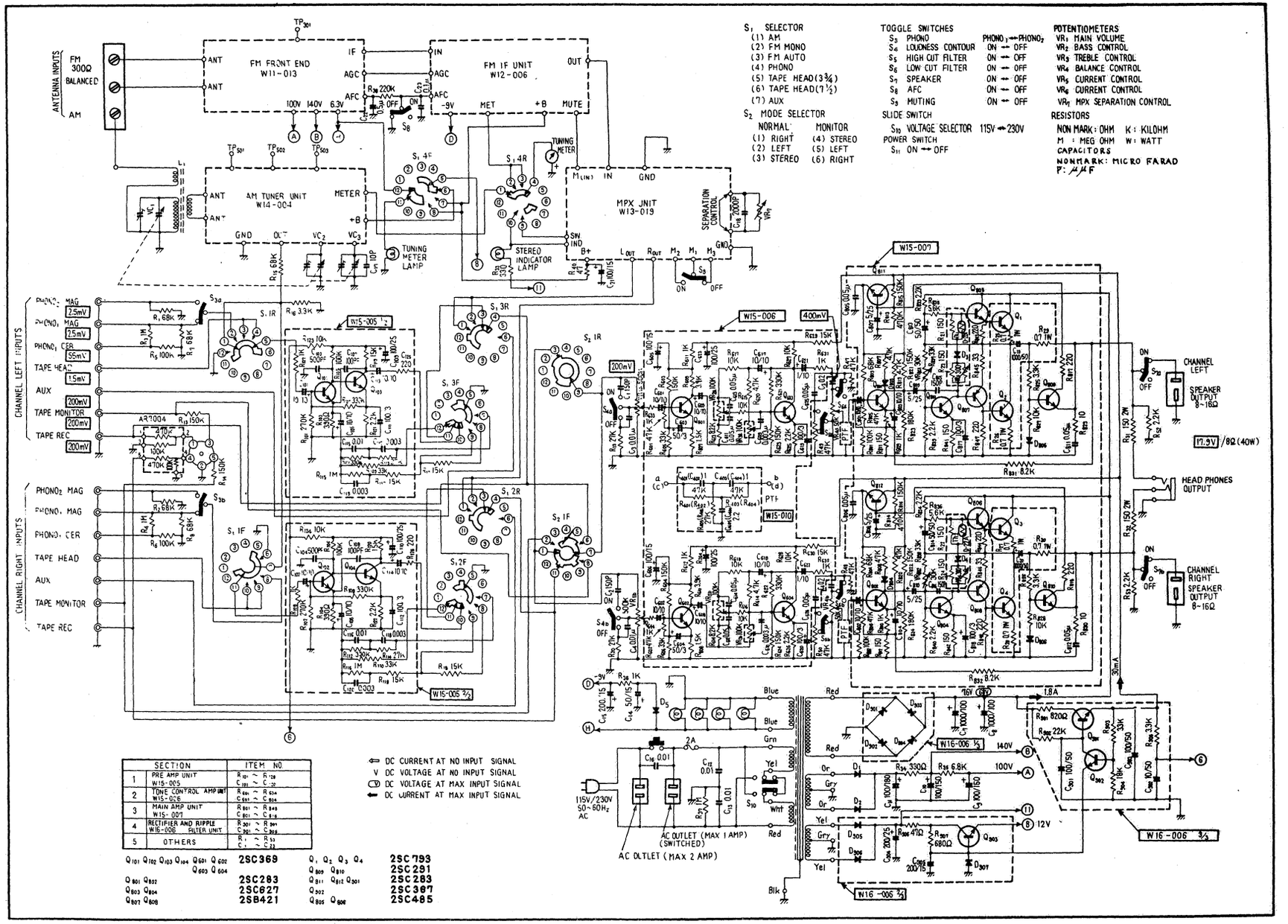

S_1 SELECTOR
(1) AM
(2) FM MONO
(3) FM AUTO
(4) PHONO
(5) TAPE HEAD(3¾)
(6) TAPE HEAD(7½)
(7) AUX

S_2 MODE SELECTOR

NORMAL	MONITOR
(1) RIGHT	(4) STEREO
(2) LEFT	(5) LEFT
(3) STEREO	(6) RIGHT

TOGGLE SWITCHES

S_3	PHONO	$PHONO_1 \rightleftharpoons PHONO_2$
S_4	LOUDNESS CONTOUR	ON ⇌ OFF
S_5	HIGH CUT FILTER	ON ⇌ OFF
S_6	LOW CUT FILTER	ON ⇌ OFF
S_7	SPEAKER	ON ⇌ OFF
S_8	AFC	ON ⇌ OFF
S_9	MUTING	ON ⇌ OFF

SLIDE SWITCH
S_{10} VOLTAGE SELECTOR 115V ⇌ 230V
POWER SWITCH
S_{11} ON ⇌ OFF

POTENTIOMETERS
VR_1 MAIN VOLUME
VR_2 BASS CONTROL
VR_3 TREBLE CONTROL
VR_4 BALANCE CONTROL
VR_5 CURRENT CONTROL
VR_6 CURRENT CONTROL
VR_7 MPX SEPARATION CONTROL

RESISTORS
NON MARK: OHM K: KILOHM
M: MEG OHM W: WATT
CAPACITORS
NON MARK: MICRO FARAD
P: μμF

	SECTION	ITEM NO.
1	PRE AMP UNIT W15-005	$R_{101} \sim R_{128}$, $C_{101} \sim C_{132}$
2	TONE CONTROL AMP UNIT W15-006	$R_{201} \sim R_{234}$, $C_{201} \sim C_{224}$
3	MAIN AMP UNIT W15-007	$R_{301} \sim R_{349}$, $C_{301} \sim C_{316}$
4	RECTIFIER AND RIPPLE FILTER UNIT W16-006	$R_{301} \sim R_{309}$, $C_{301} \sim C_{308}$
5	OTHERS	$R_1 \sim R_{53}$, $C_1 \sim C_{22}$

⇦ DC CURRENT AT NO INPUT SIGNAL
V DC VOLTAGE AT NO INPUT SIGNAL
(V) DC VOLTAGE AT MAX INPUT SIGNAL
⇦ DC CURRENT AT MAX INPUT SIGNAL

Q_{101} Q_{102} Q_{103} Q_{104} Q_{601} Q_{602} Q_{603} Q_{604}	2SC369	Q_1, Q_2, Q_3, Q_4	2SC793
		Q_{809} Q_{810}	2SC291
Q_{801} Q_{802}	2SC283	Q_{811} Q_{812} Q_{301}	2SC283
Q_{803} Q_{804}	2SC627	Q_{302}	2SC367
Q_{807} Q_{808}	2SB421	Q_{805} Q_{806}	2SC485

AM TUNER UNIT W14-004

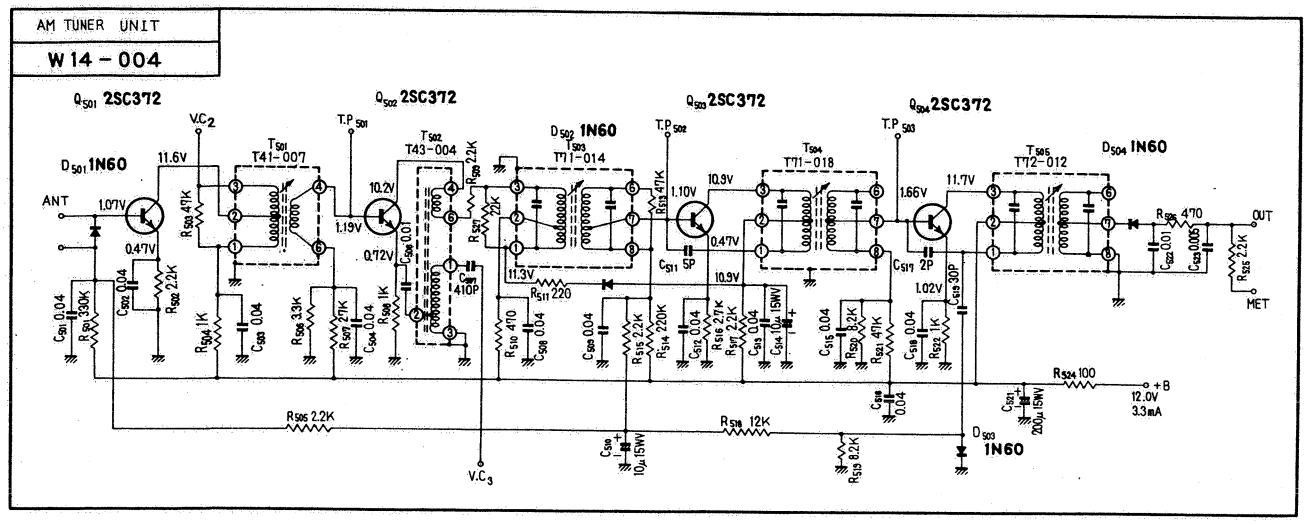

FM FRONTEND W11-013

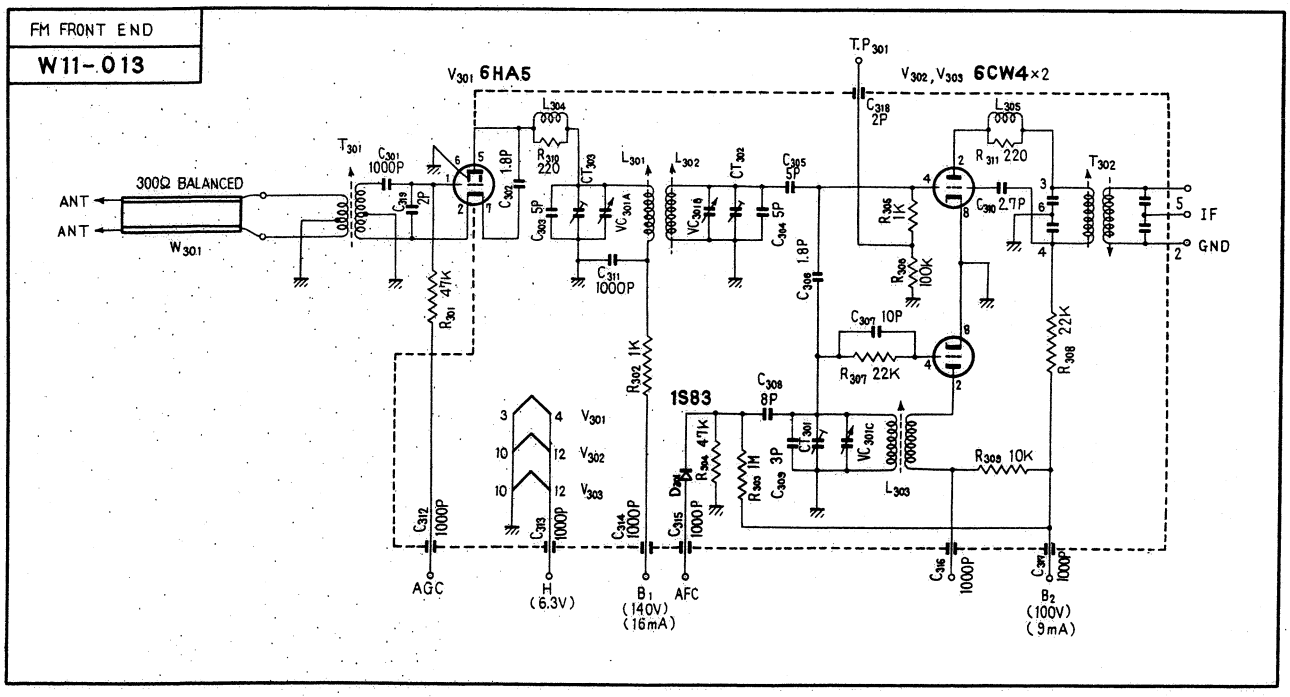

62

FM IF UNIT W12-006

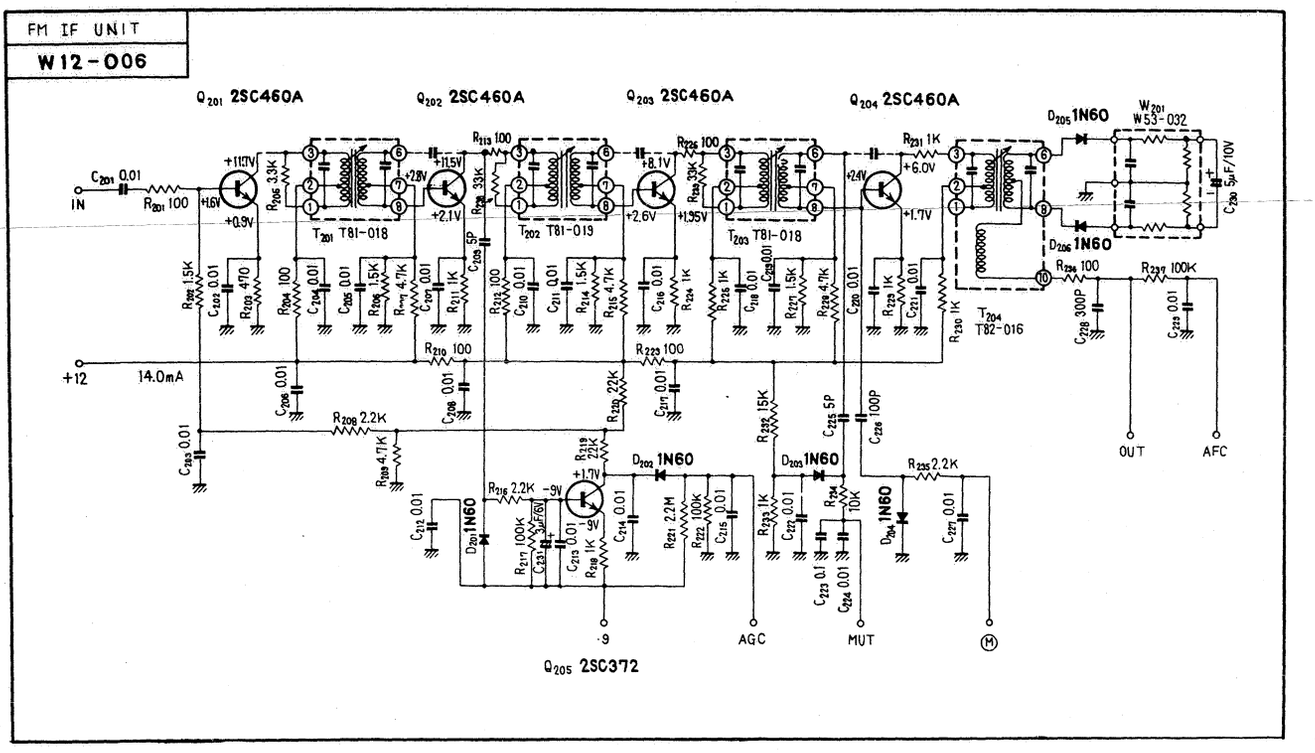

MPX UNIT W13-019

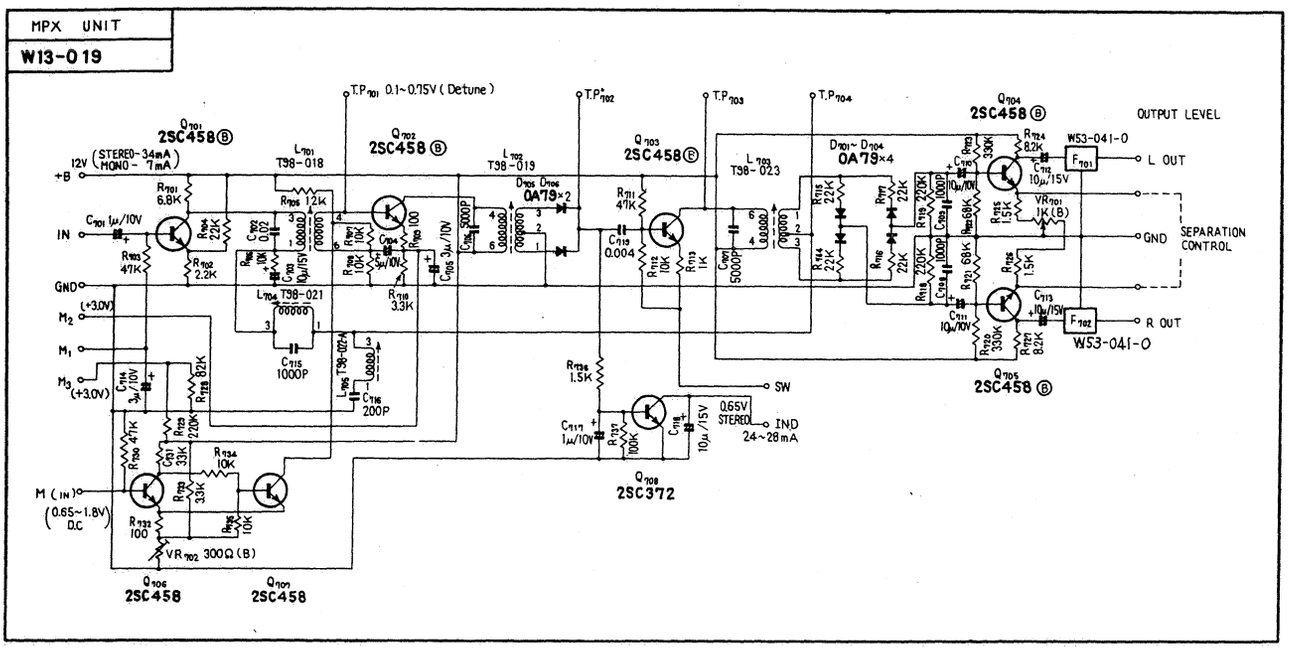

63

Model SX-1000TD Ⓕ, SX-1000TW / FW

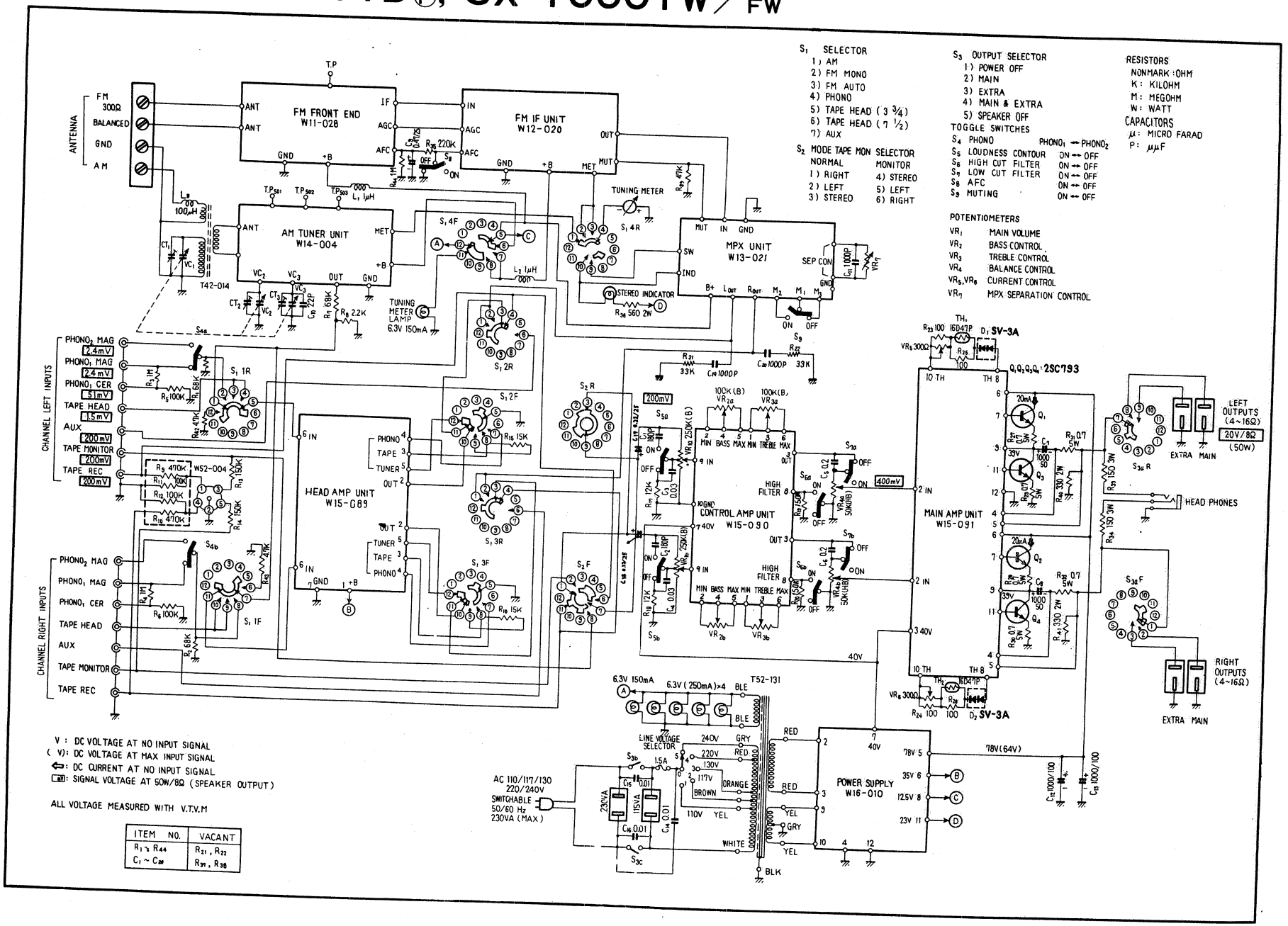

S1 SELECTOR
1) AM
2) FM MONO
3) FM AUTO
4) PHONO
5) TAPE HEAD (3 3/4)
6) TAPE HEAD (7 1/2)
7) AUX

S2 MODE TAPE MON SELECTOR
NORMAL MONITOR
1) RIGHT 4) STEREO
2) LEFT 5) LEFT
3) STEREO 6) RIGHT

S3 OUTPUT SELECTOR
1) POWER OFF
2) MAIN
3) EXTRA
4) MAIN & EXTRA
5) SPEAKER OFF

TOGGLE SWITCHES
S4 PHONO PHONO1 ⇌ PHONO2
S5 LOUDNESS CONTOUR ON ⇌ OFF
S6 HIGH CUT FILTER ON ⇌ OFF
S7 LOW CUT FILTER ON ⇌ OFF
S8 AFC ON ⇌ OFF
S9 MUTING ON ⇌ OFF

POTENTIOMETERS
VR1 MAIN VOLUME
VR2 BASS CONTROL
VR3 TREBLE CONTROL
VR4 BALANCE CONTROL
VR5,VR6 CURRENT CONTROL
VR7 MPX SEPARATION CONTROL

RESISTORS
NONMARK : OHM
K : KILOHM
M : MEGOHM
W : WATT

CAPACITORS
μ : MICRO FARAD
P : μμF

ITEM NO.	VACANT
R1 ~ R44	R21, R22
C1 ~ C38	R31, R36

Model SX-1500T Ⓕ, SX-1500T

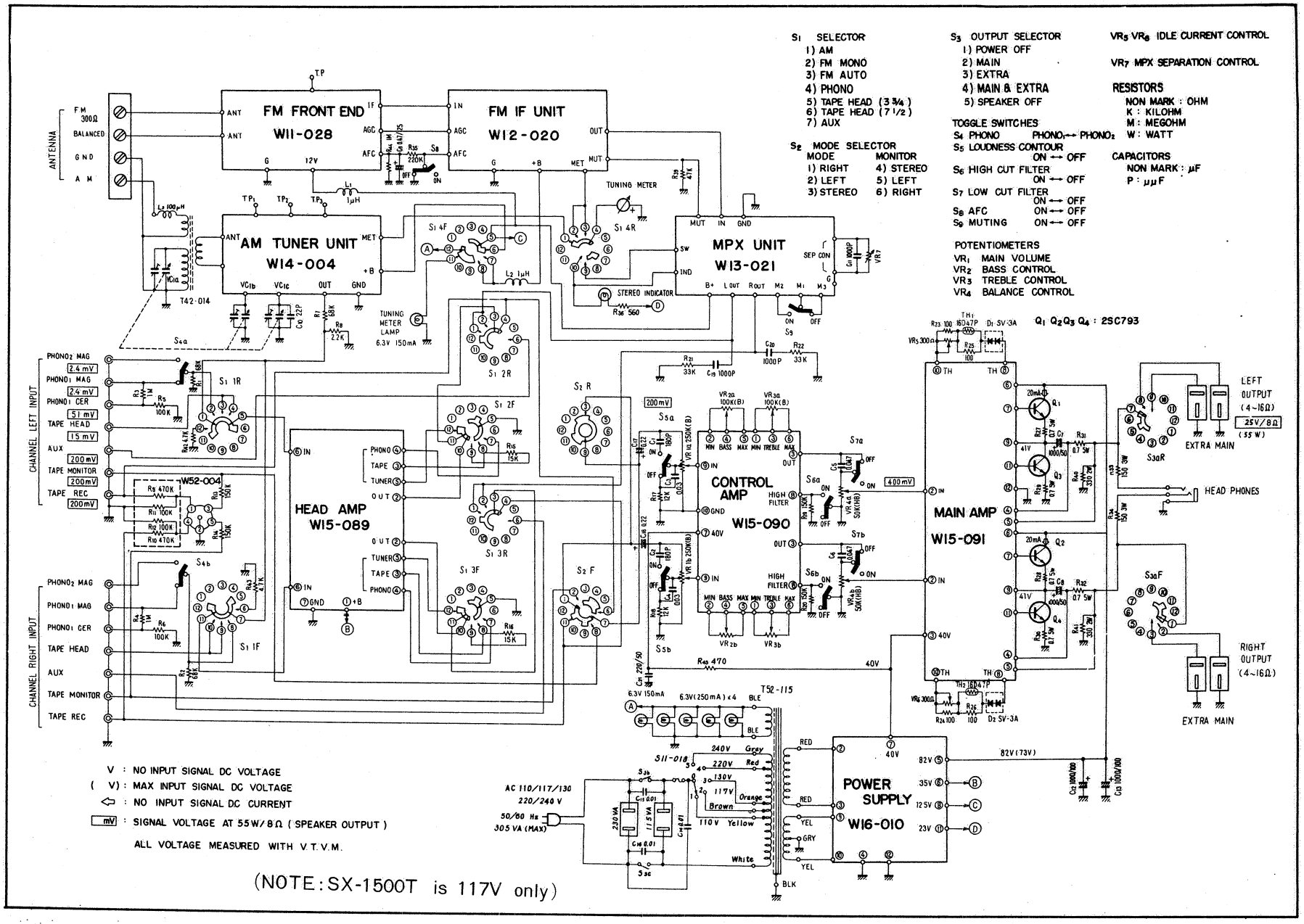

AM TUNER UNIT W14-004

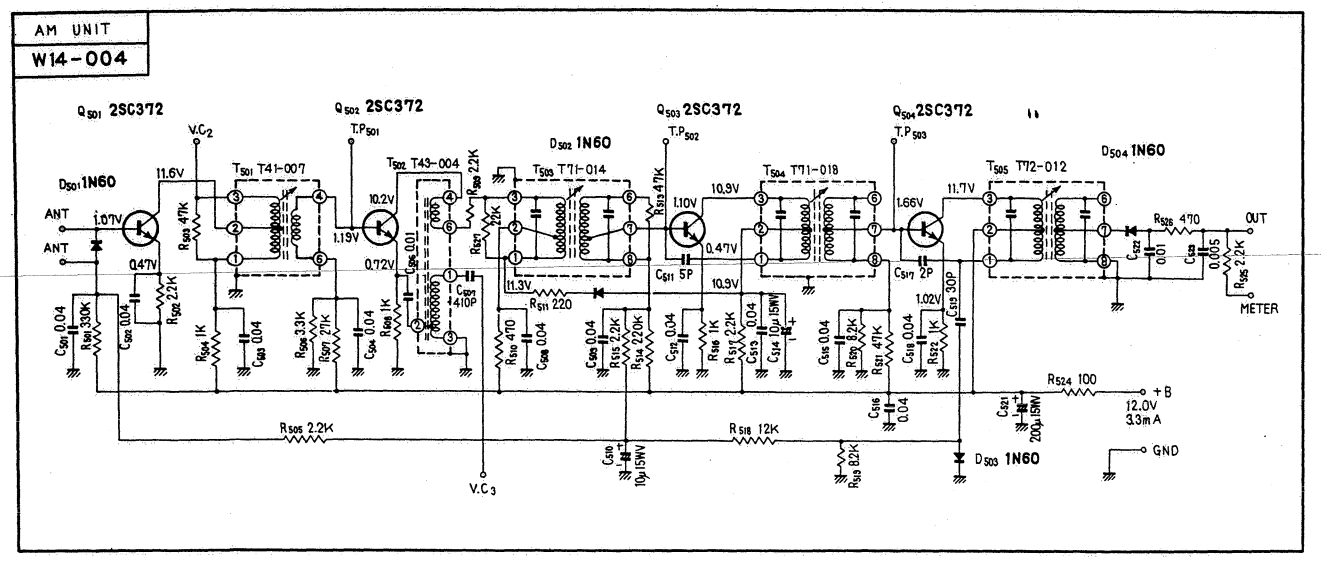

FM FRONTEND W11-028

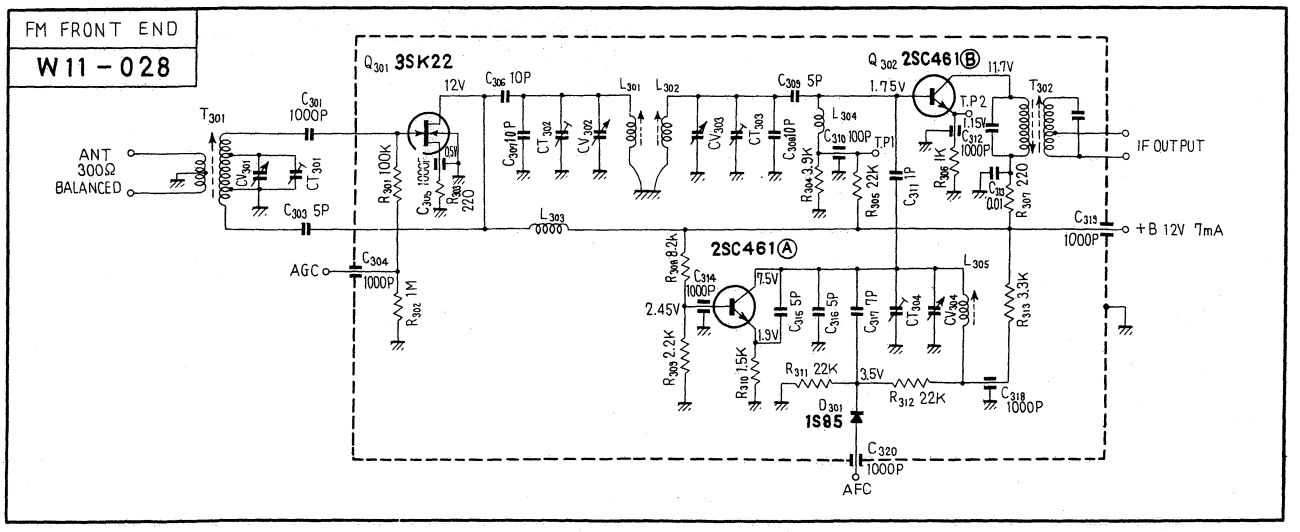

66

FM IF UNIT W12-020

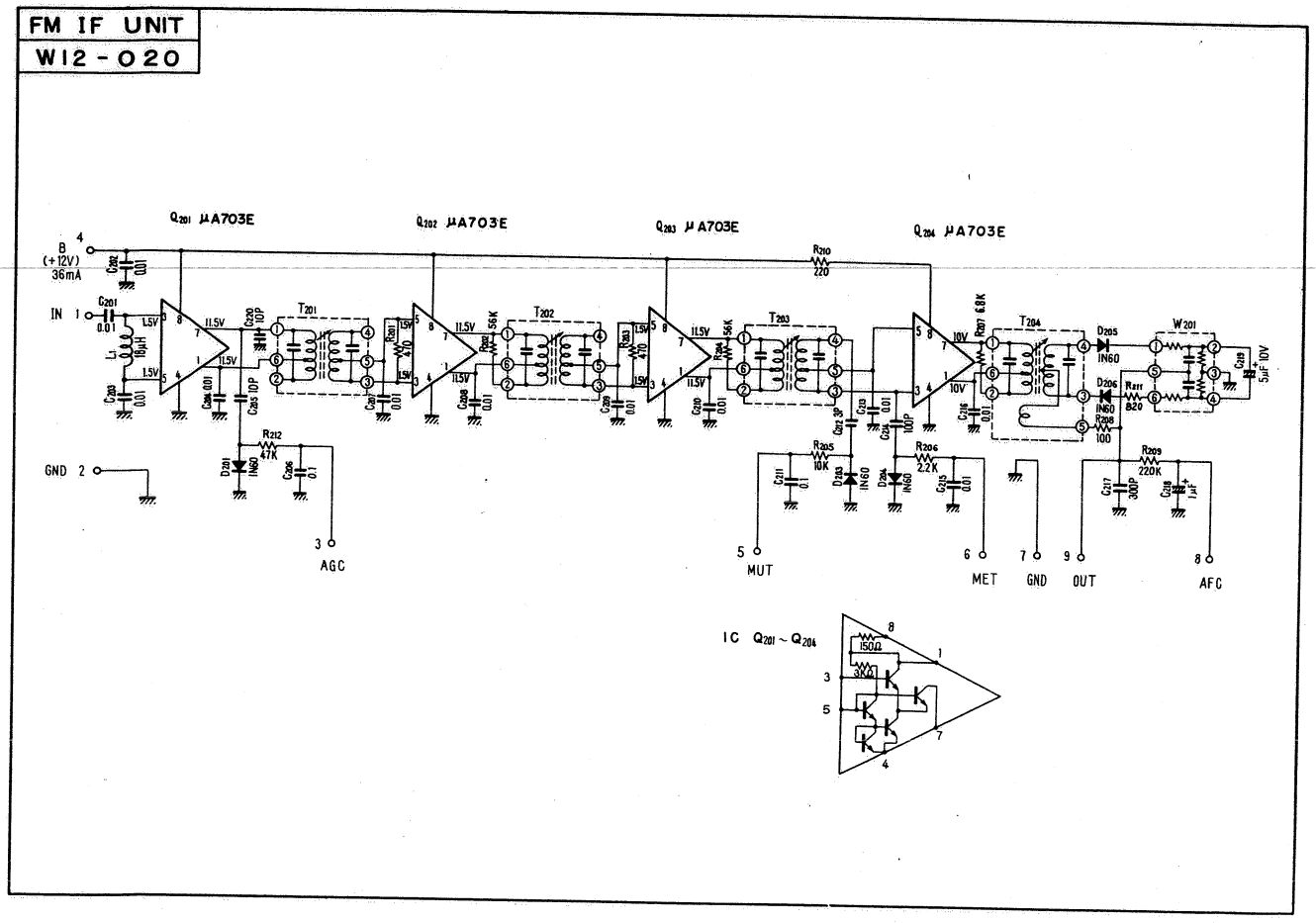

MPX UNIT W13-021

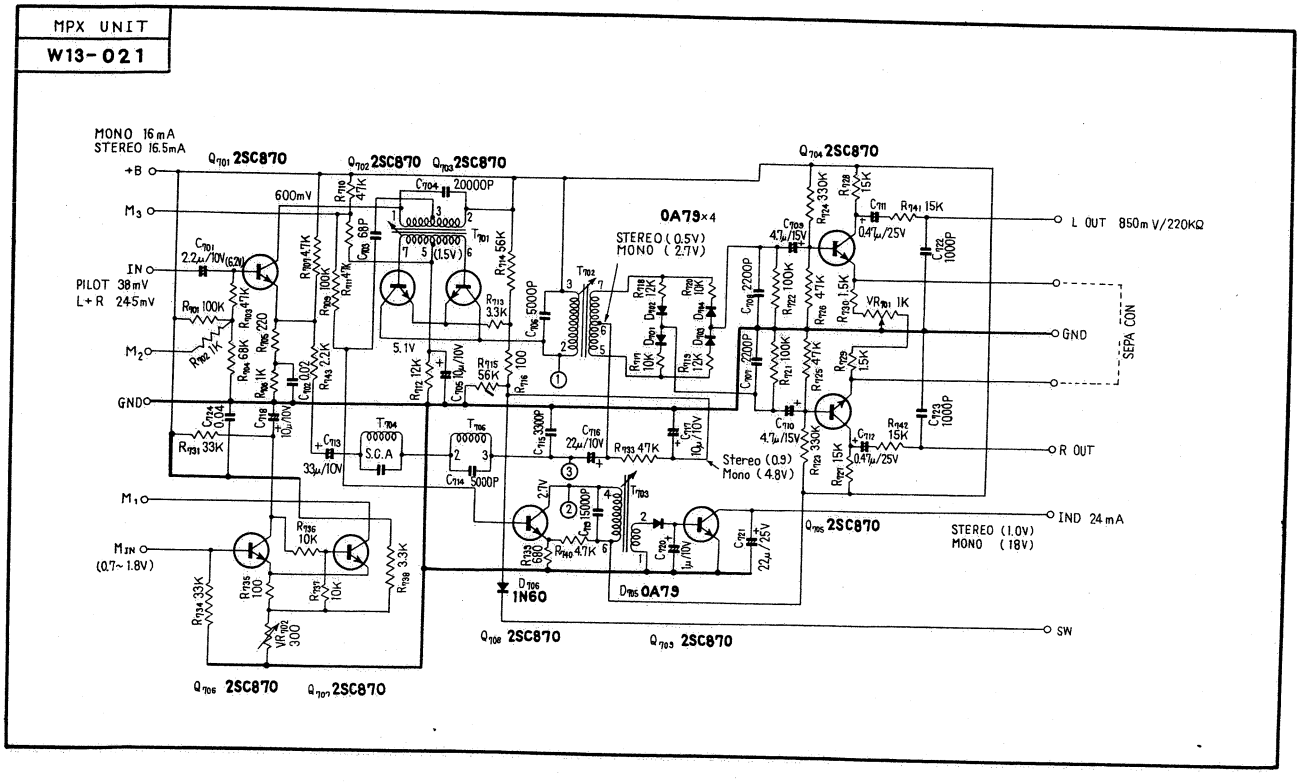

HEAD AMP UNIT W15-089

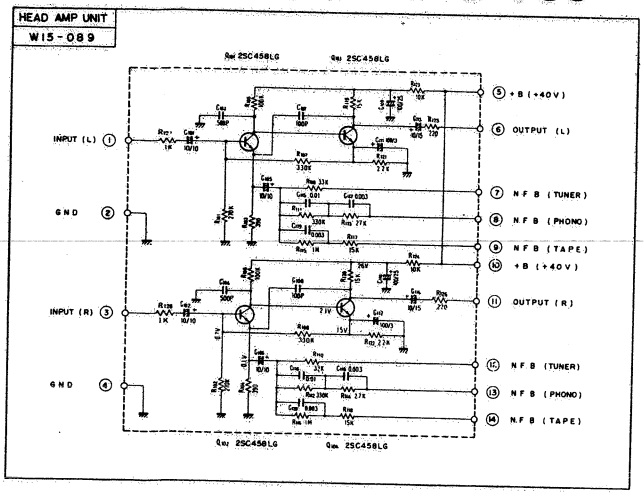

CONTROL AMP UNIT W15-090

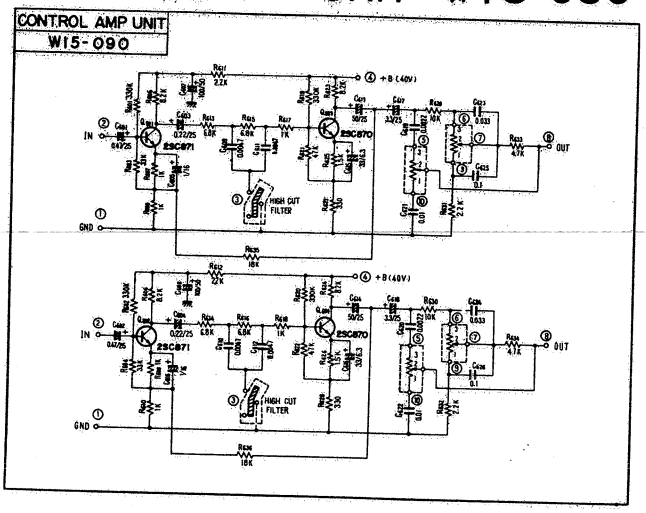

MAIN AMP UNIT W15-091

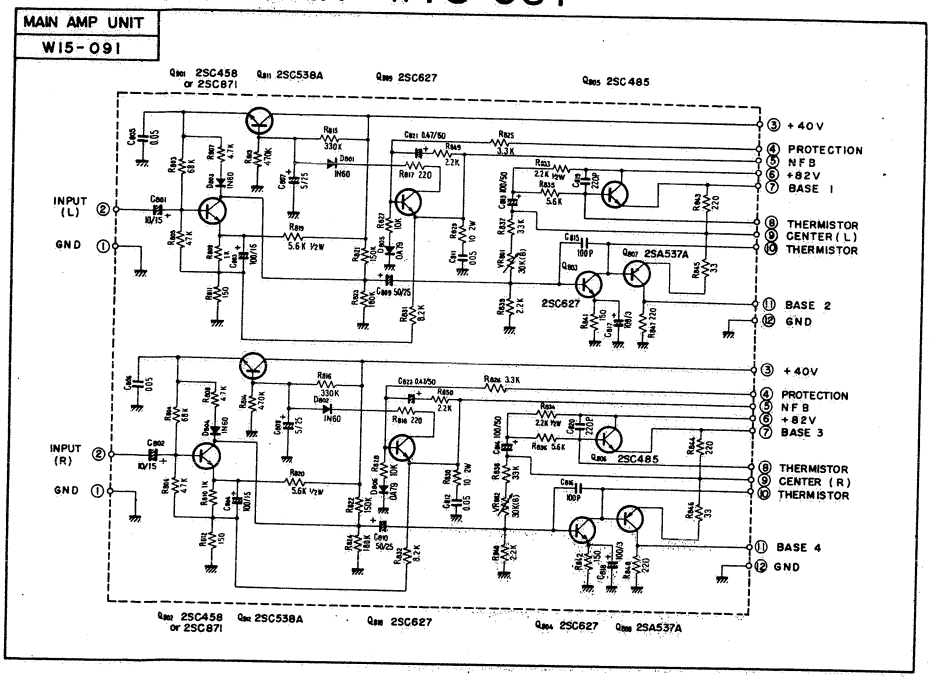

POWER SUPPLY UNIT W16-010

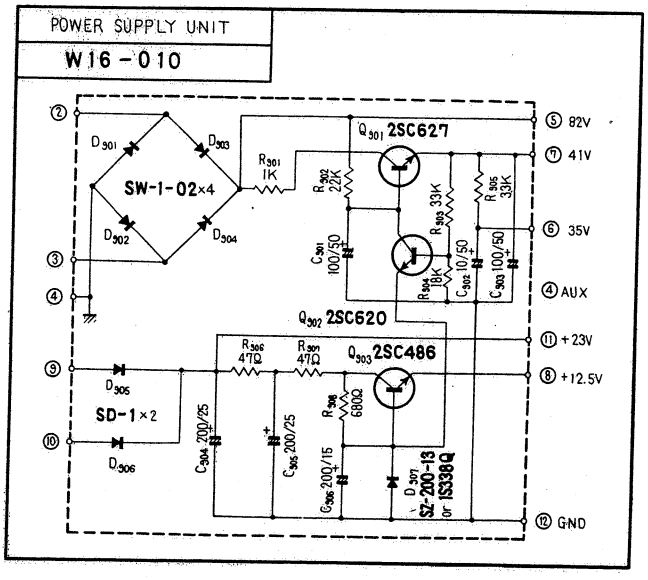

68

NOTE:

If your set is provided with the CONTROL AMP UNIT and the FILTER UNIT separately, refer to the following circuit diagrams.

CONTROL AMP UNIT W15-031

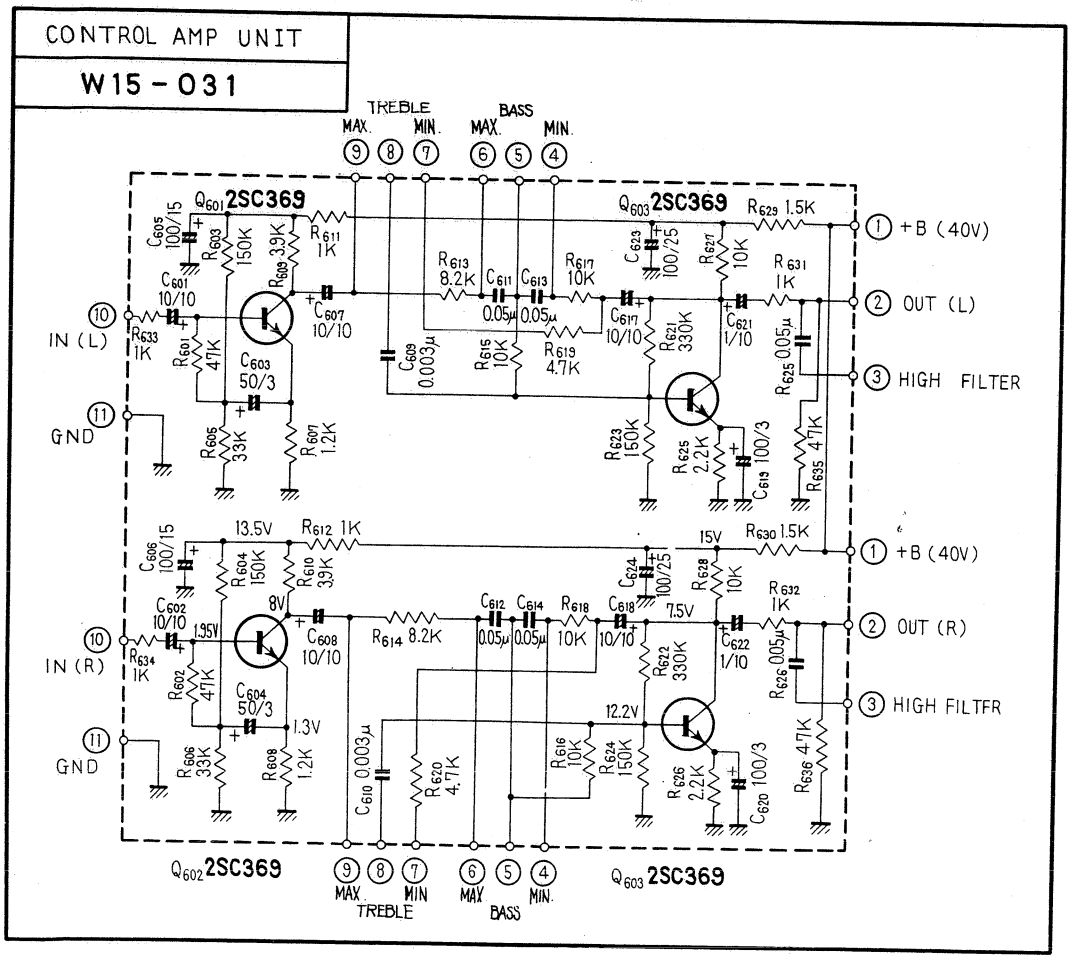

FILTER UNIT W15-010

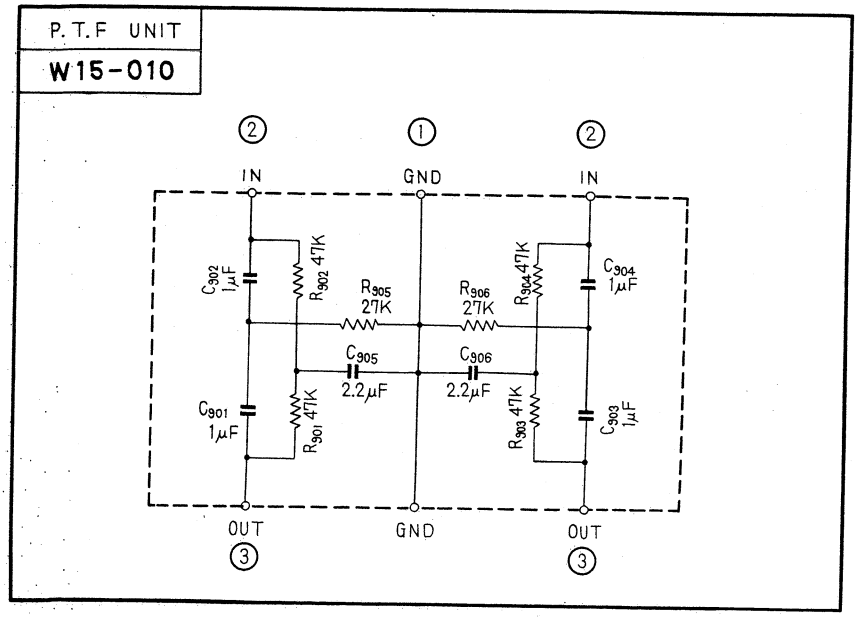

69

SX-1500TD

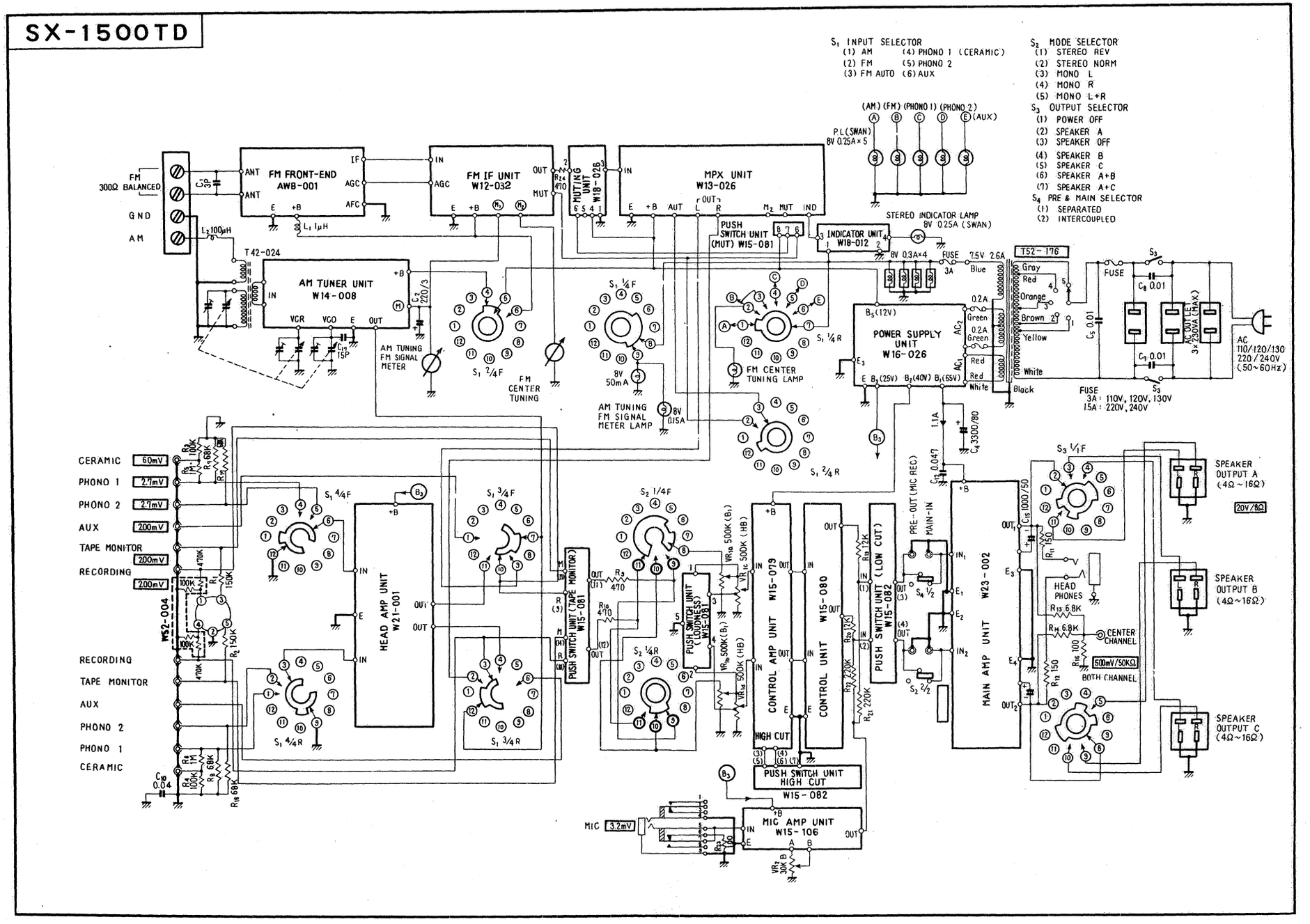

S1 INPUT SELECTOR
(1) AM (4) PHONO 1 (CERAMIC)
(2) FM (5) PHONO 2
(3) FM AUTO (6) AUX
S2 MODE SELECTOR
(1) STEREO REV
(2) STEREO NORM
(3) MONO L
(4) MONO R
(5) MONO L+R
S3 OUTPUT SELECTOR
(1) POWER OFF
(2) SPEAKER A
(3) SPEAKER OFF
(4) SPEAKER B
(5) SPEAKER C
(6) SPEAKER A+B
(7) SPEAKER A+C
S4 PRE & MAIN SELECTOR
(1) SEPARATED
(2) INTERCOUPLED
FM 300Ω BALANCED
GND
AM
FM FRONT-END AWB-001
FM IF UNIT W12-032
MUTING UNIT W18-026
MPX UNIT W13-026
AM TUNER UNIT W14-008
T42-024
PUSH SWITCH UNIT (MUT) W15-081
INDICATOR UNIT W18-012
STEREO INDICATOR LAMP 8V 0.25A (SWAN)
P.L (SWAN) 8V 0.25A×5
AM TUNING FM SIGNAL METER
FM CENTER TUNING
AM TUNING FM SIGNAL METER LAMP
FM CENTER TUNING LAMP
POWER SUPPLY UNIT W16-026
T52-176
AC 110/120/130 220/240V (50~60Hz)
FUSE 3A: 110V, 120V, 130V 1.5A: 220V, 240V
AC OUTLET 3×230VA (MAX)
CERAMIC 60mV
PHONO 1 2.7mV
PHONO 2 2.7mV
AUX 200mV
TAPE MONITOR 200mV
RECORDING 200mV
RECORDING
TAPE MONITOR
AUX
PHONO 2
PHONO 1
CERAMIC
W52-004
HEAD AMP UNIT W21-001
PUSH SWITCH UNIT (TAPE MONITOR) W15-081
PUSH SWITCH UNIT (LOUDNESS) W15-081
CONTROL AMP UNIT W15-079
CONTROL UNIT W15-080
PUSH SWITCH UNIT (LOW CUT) W15-082
PUSH SWITCH UNIT HIGH CUT W15-082
MIC AMP UNIT W15-106
MIC 3.2mV
MAIN AMP UNIT W23-002
PRE-OUT (MIC REC)
MAIN-IN
HEAD PHONES
CENTER CHANNEL
BOTH CHANNEL
500mV/50KΩ
SPEAKER OUTPUT A (4Ω~16Ω)
SPEAKER OUTPUT B (4Ω~16Ω)
SPEAKER OUTPUT C (4Ω~16Ω)
20V/8Ω

FM FRONT END

FM FRONT END
AWB-001

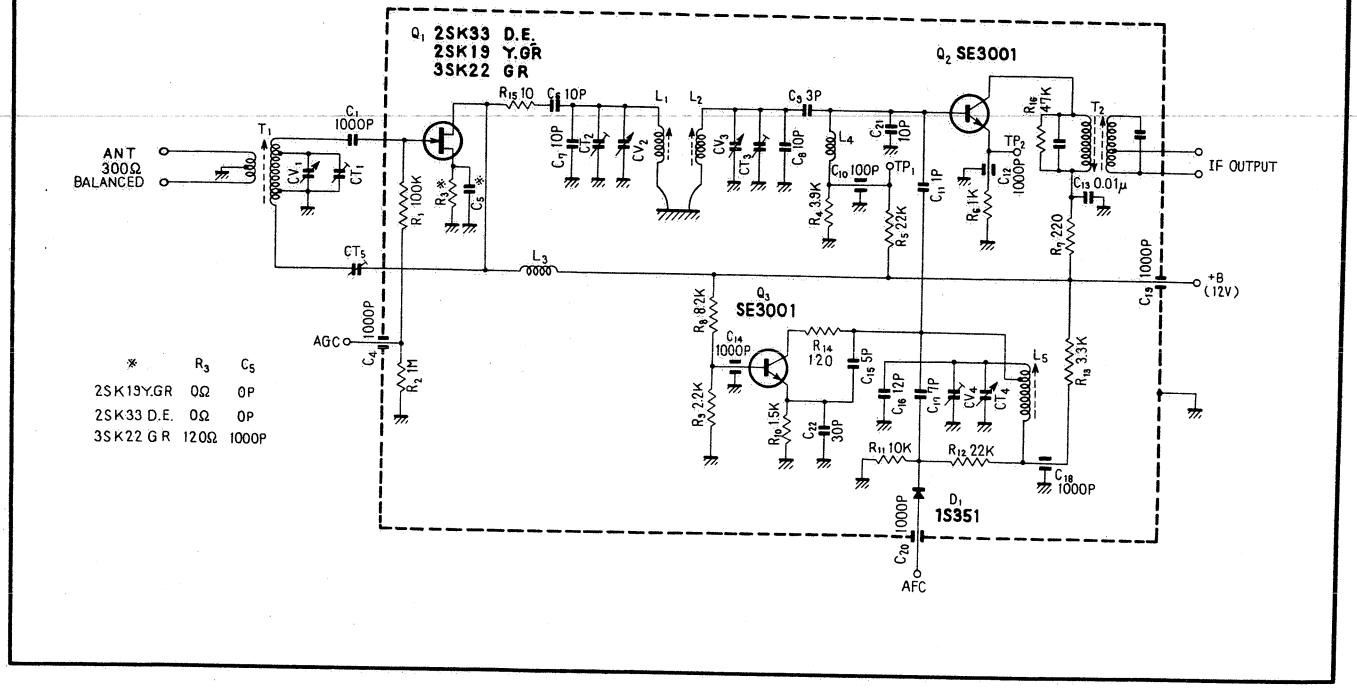

FM FRONT END for FW KLW model

FM FRONT END
W11-028

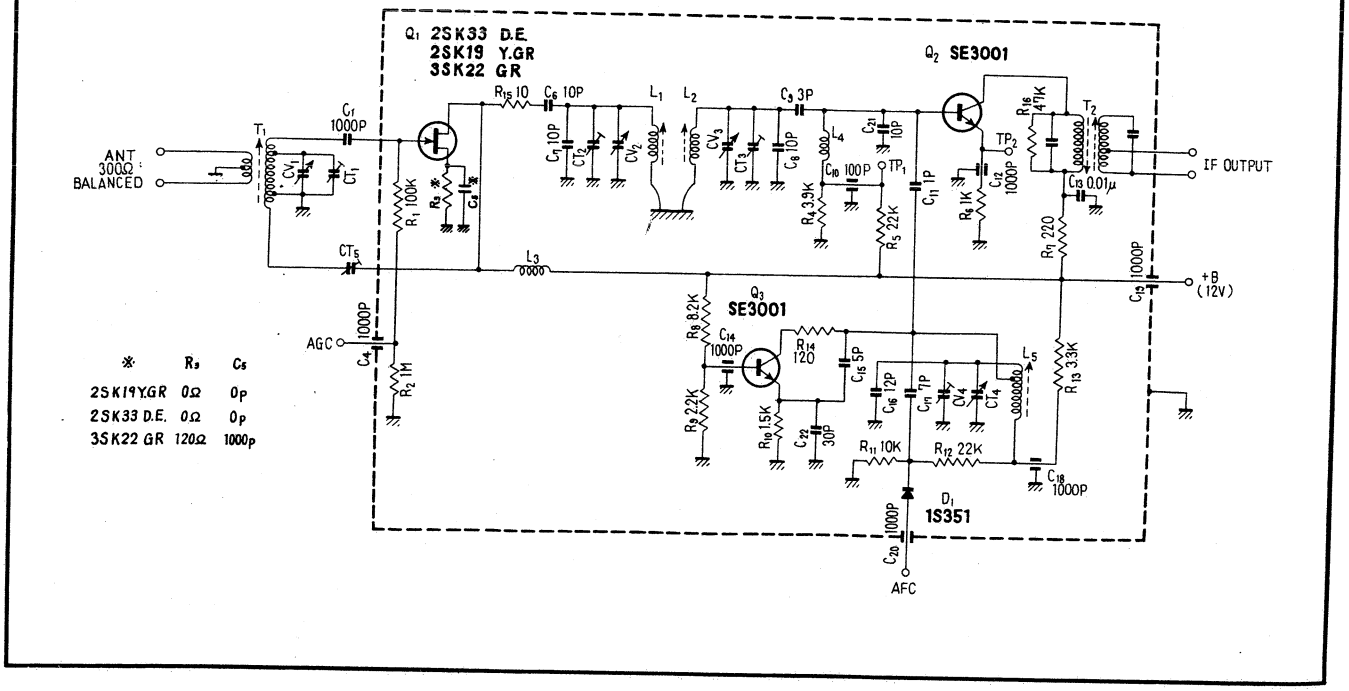

FM IF UNIT

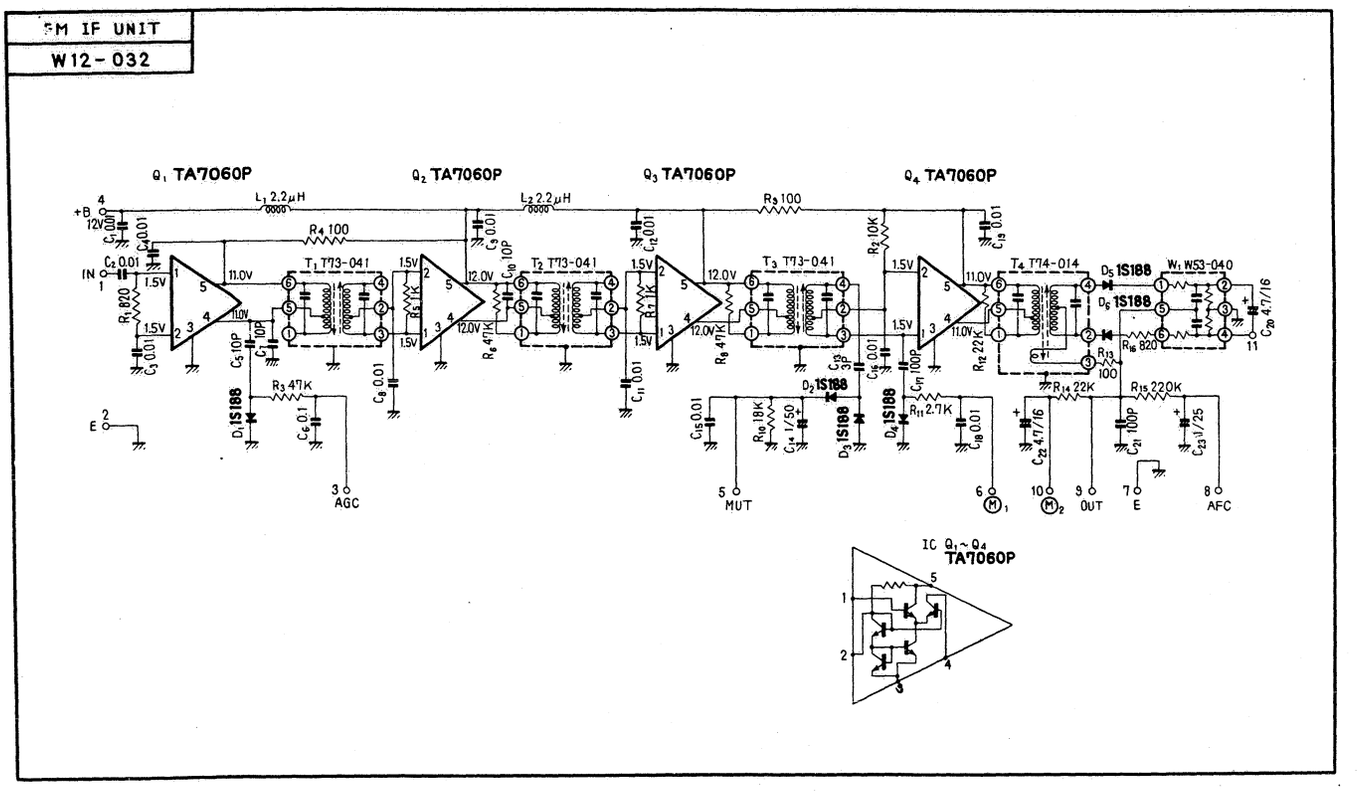

MPX UNIT

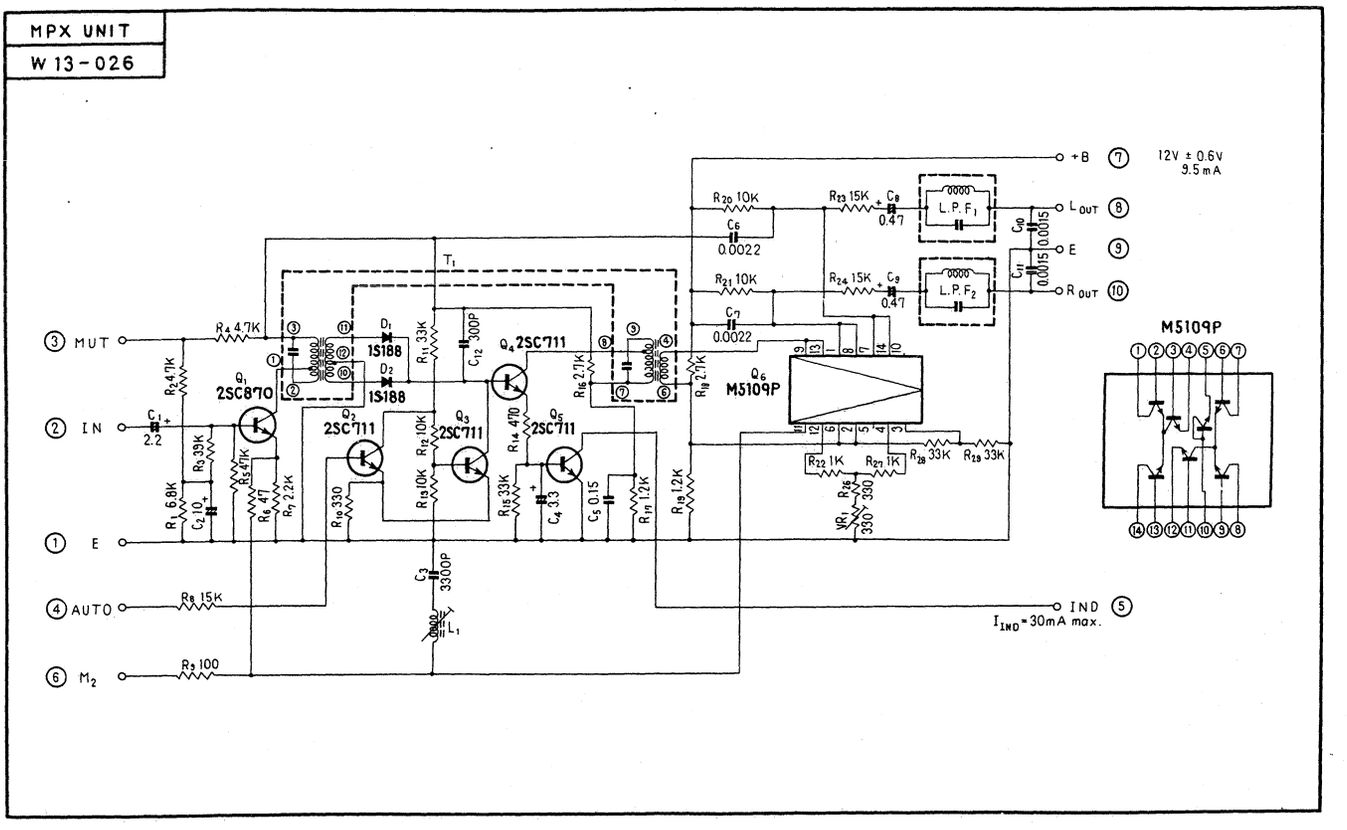

72

AM TUNER UNIT

AM TUNER UNIT
W14 – 008

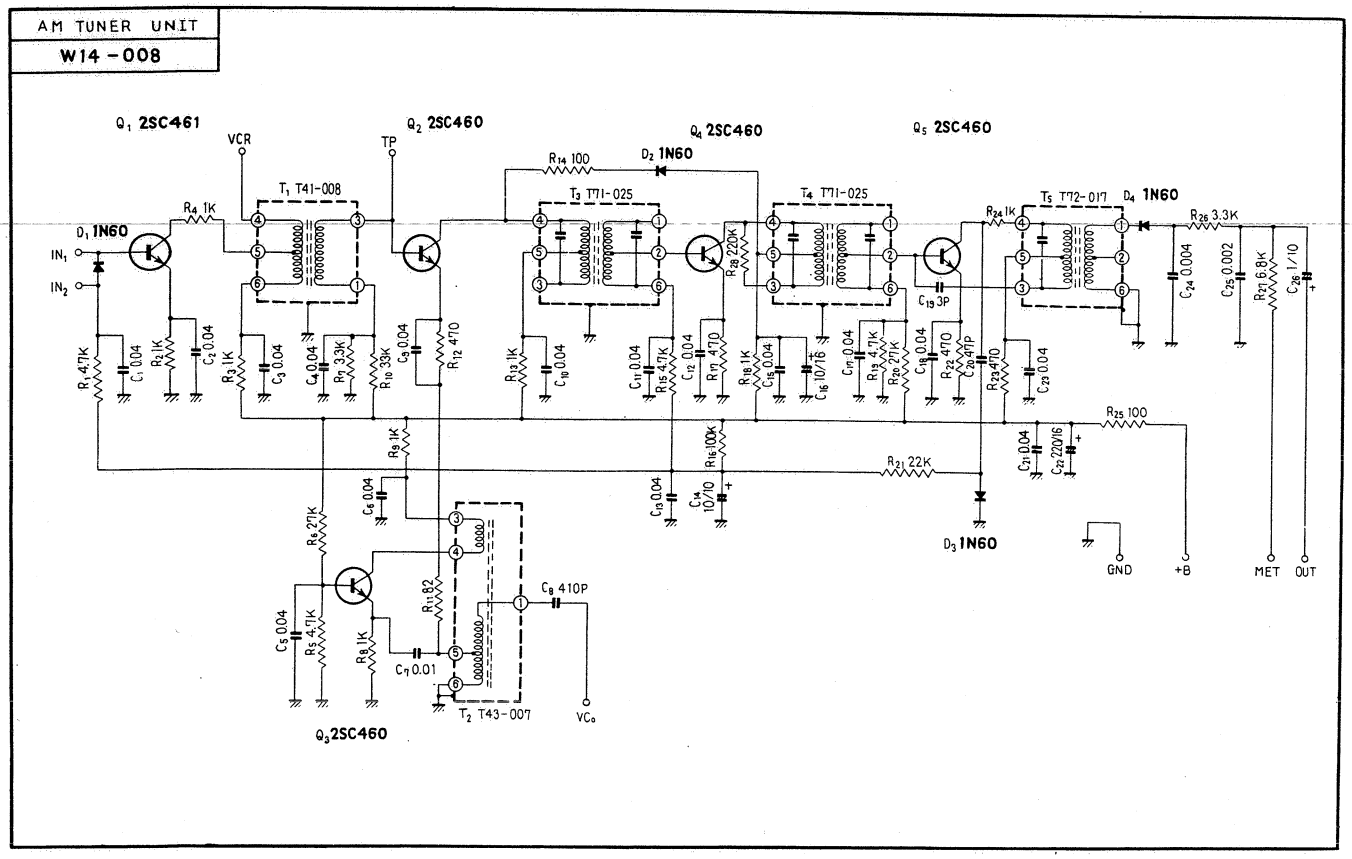

MUTING UNIT

MUTING UNIT
W18 – 026

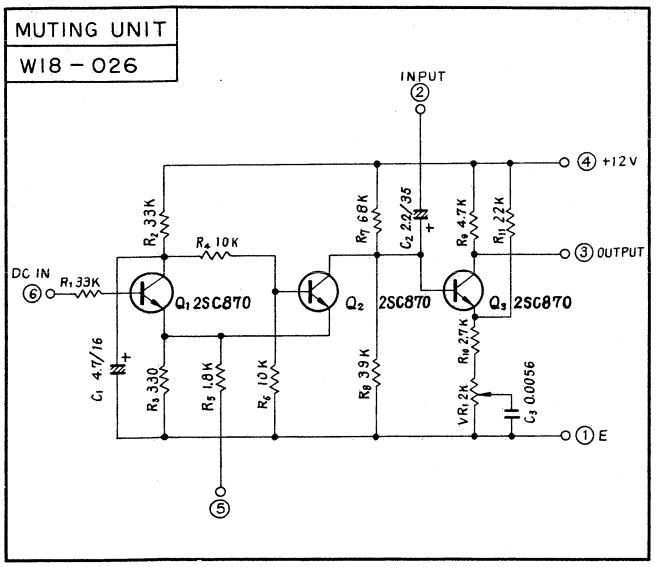

HEAD AMP UNIT

HEAD AMP UNIT
W21 – 001

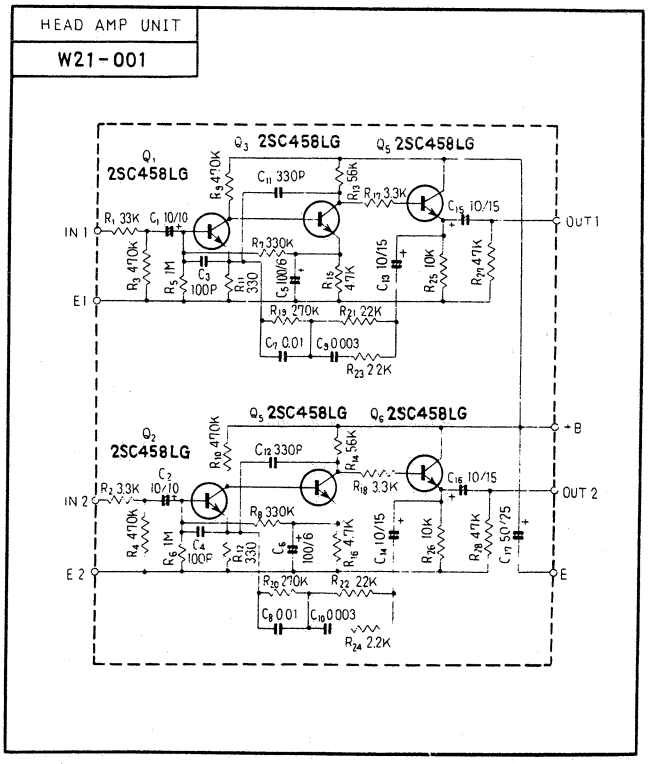

CONTROL AMP UNIT

CONTROL AMP UNIT
W15-079

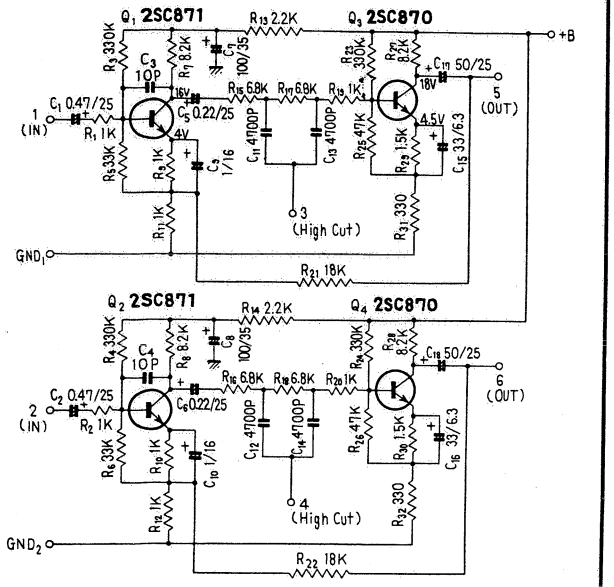

POWER SUPPLY UNIT

POWER SUPPLY UNIT
W16-026

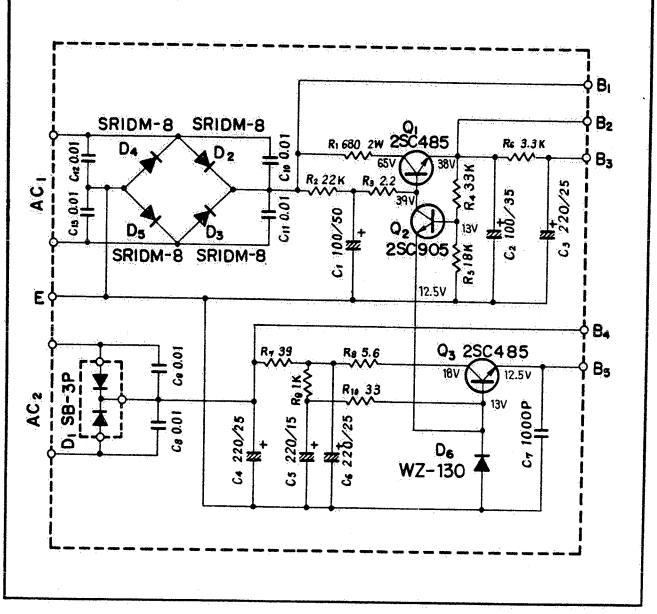

MAIN AMP UNIT

MAIN AMP UNIT
W23-002

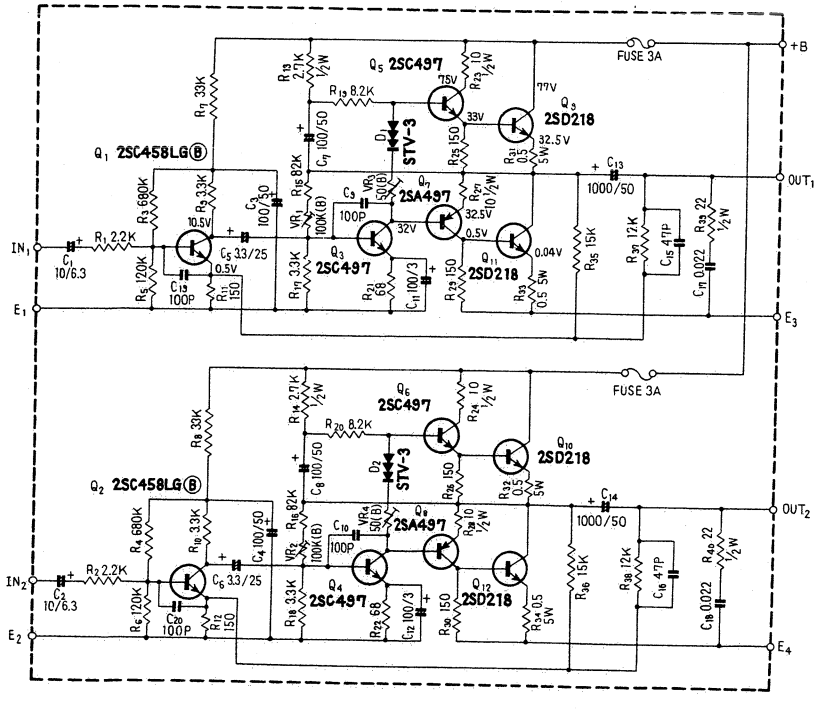

74

PUSH SWITCH UNIT

PUSH SWITCH UNIT
W15-081

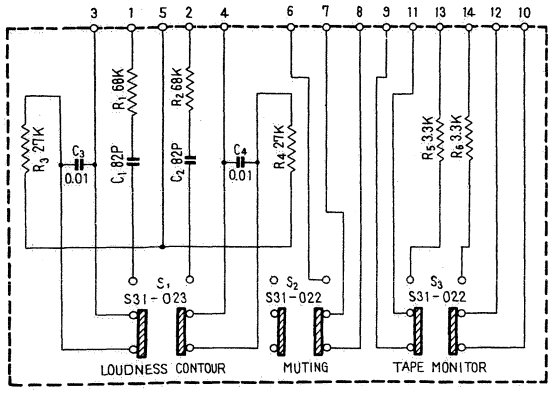

PUSH SWITCH UNIT

PUSH SWITCH UNIT
W15-082

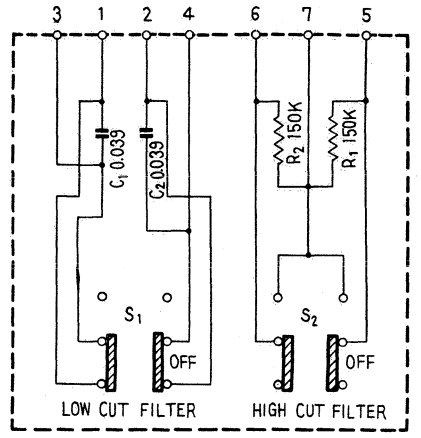

CONTROL UNIT

CONTROL UNIT
W15-080

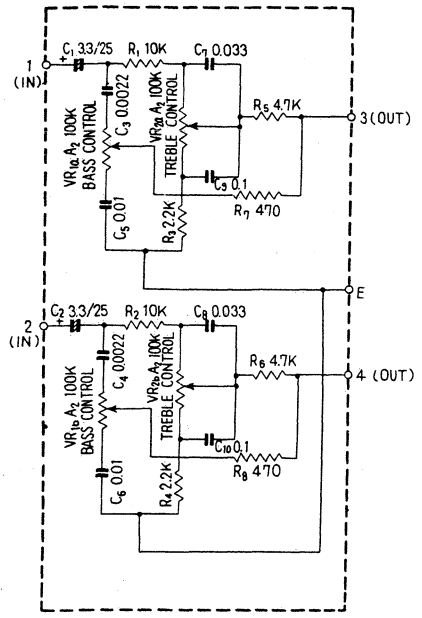

INDICATOR UNIT

INDICATOR UNIT
W18-012

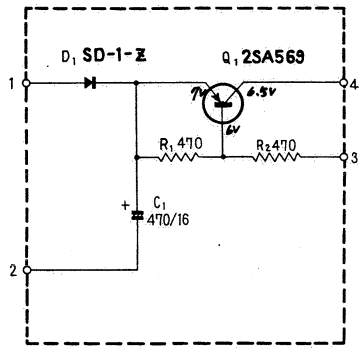

MIC AMP UNIT

MIC AMP UNIT
W15-106

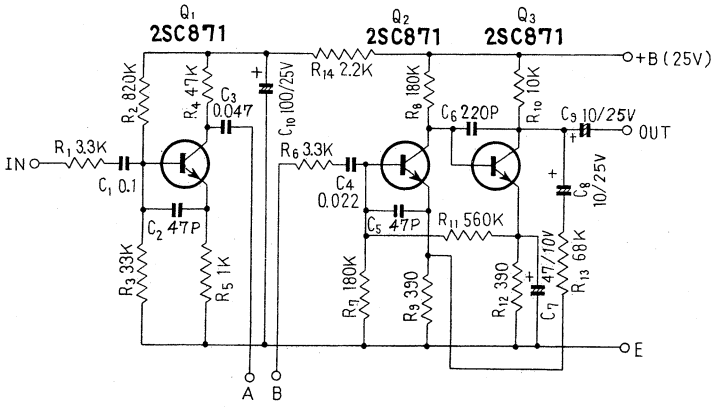

76

SX-2500

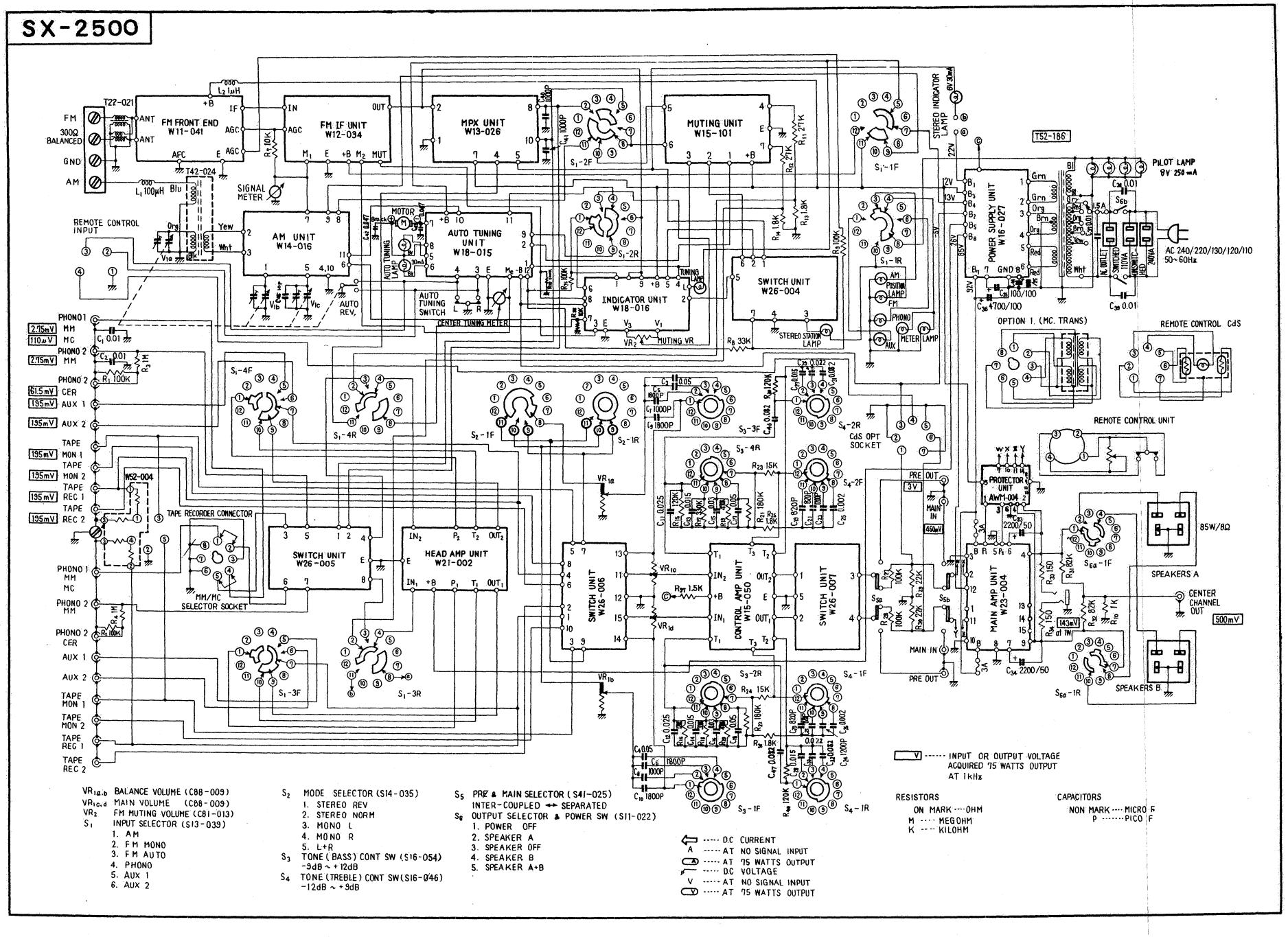

$VR_{1a,b}$ BALANCE VOLUME (C88-009)
$VR_{1c,d}$ MAIN VOLUME (C88-009)
VR_2 FM MUTING VOLUME (C81-013)
S_1 INPUT SELECTOR (S13-039)
1. AM
2. FM MONO
3. FM AUTO
4. PHONO
5. AUX 1
6. AUX 2

S_2 MODE SELECTOR (S14-035)
1. STEREO REV
2. STEREO NORM
3. MONO L
4. MONO R
5. L+R

S_3 TONE (BASS) CONT SW (S16-054) -9dB ~ +12dB

S_4 TONE (TREBLE) CONT SW (S16-046) -12dB ~ +9dB

S_5 PRE & MAIN SELECTOR (S41-025) INTER-COUPLED ↔ SEPARATED

S_6 OUTPUT SELECTOR & POWER SW (S11-022)
1. POWER OFF
2. SPEAKER A
3. SPEAKER OFF
4. SPEAKER B
5. SPEAKER A+B

77

FM FRONT END

FM FRONT END
W11-041

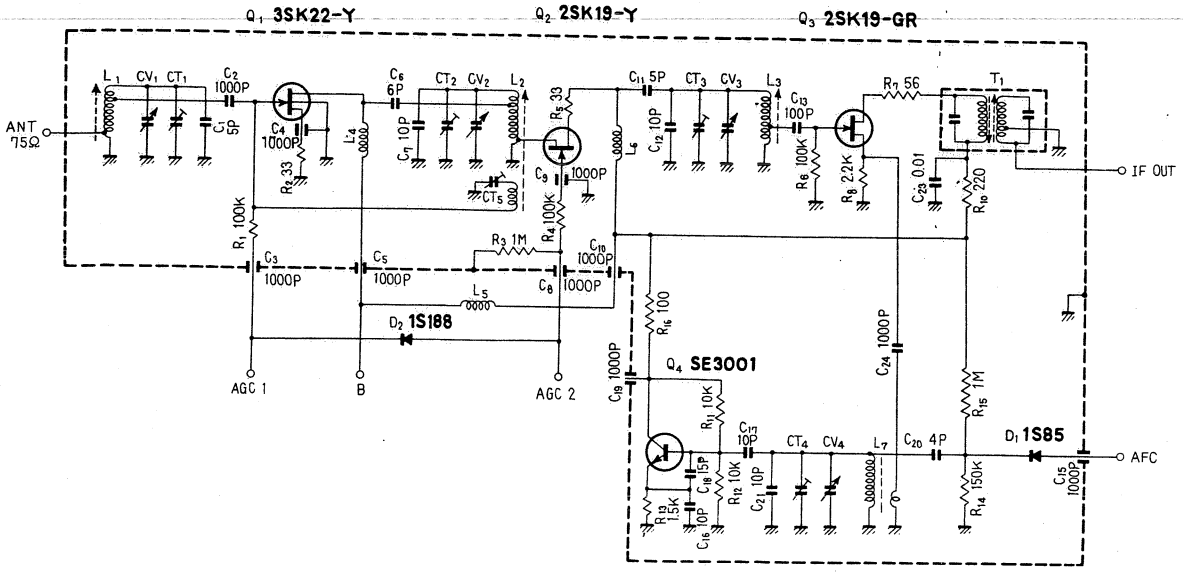

FM IF UNIT

FM IF UNIT
W12-034

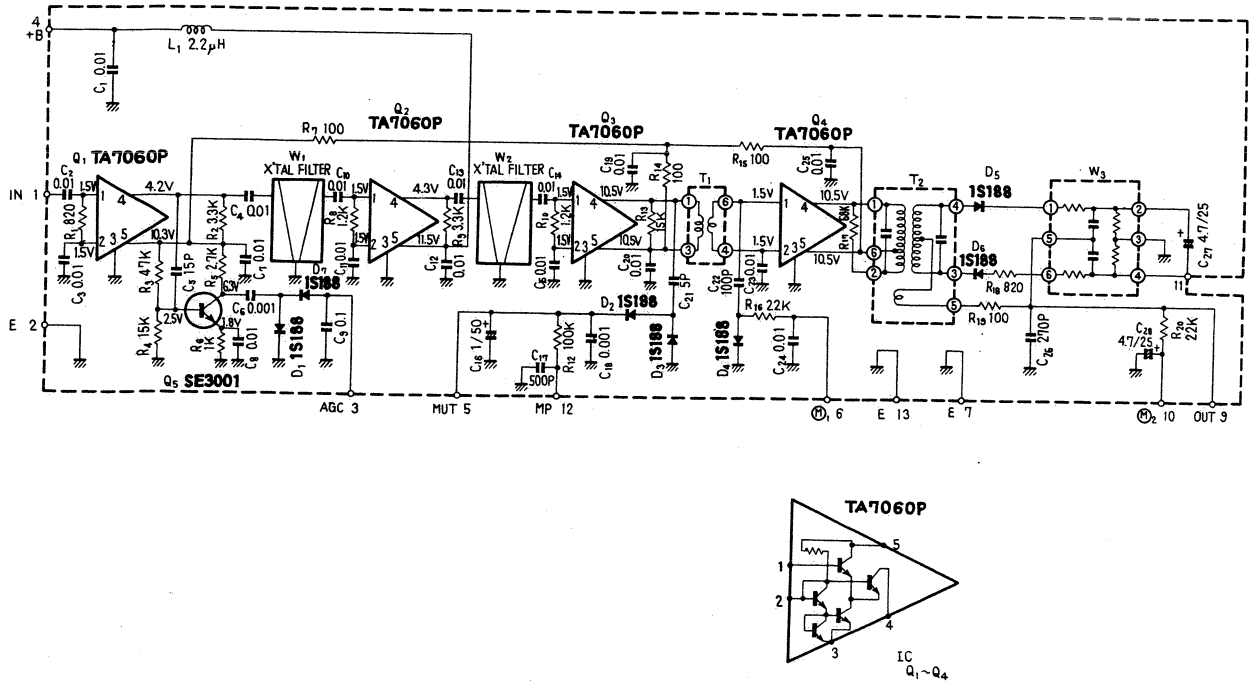

MPX UNIT

MPX UNIT
W13-026

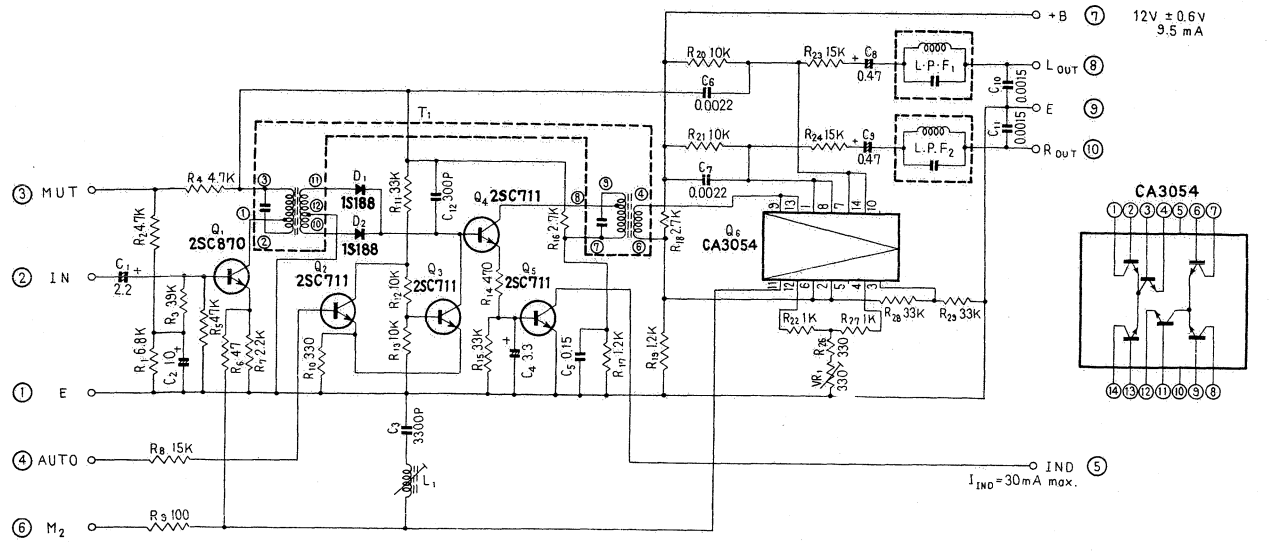

AM TUNER UNIT

AM TUNER UNIT
W14-016

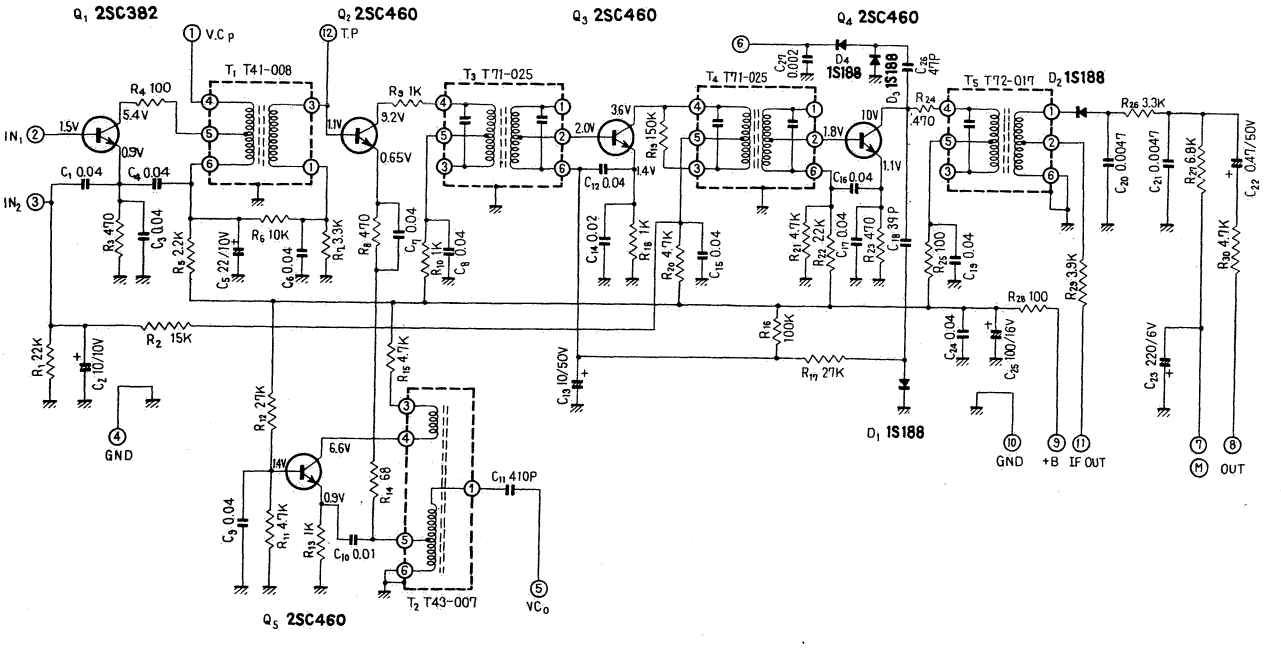

79

MUTING UNIT

MUTING UNIT
W15-101

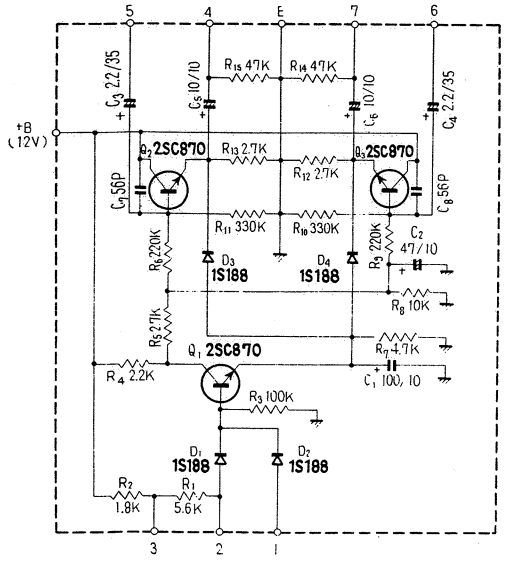

HEAD AMP UNIT

HEAD AMP UNIT
W21-002

Q1~Q6 2SC871 or 2SC458LG

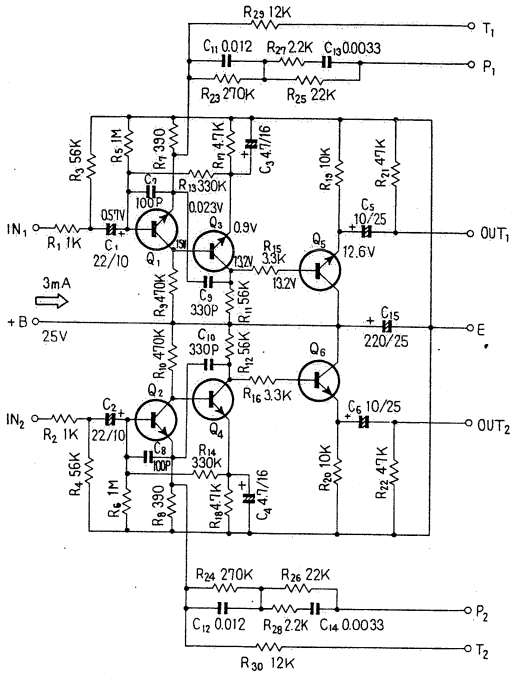

CONTROL AMP UNIT

CONTROL AMP UNIT
W15-050

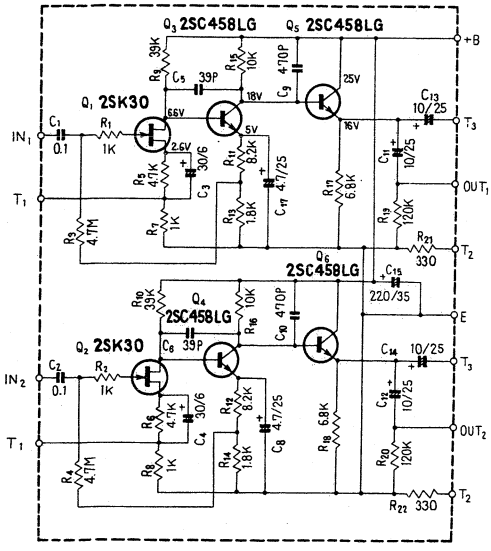

POWER SUPPLY UNIT

POWER SUPPLY UNIT
W16-027

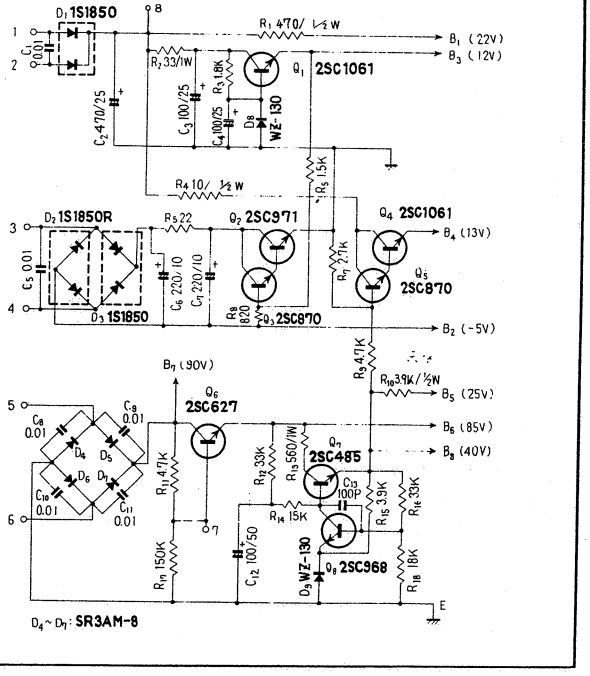

MAIN AMP UNIT

MAIN AMP UNIT
W23-004

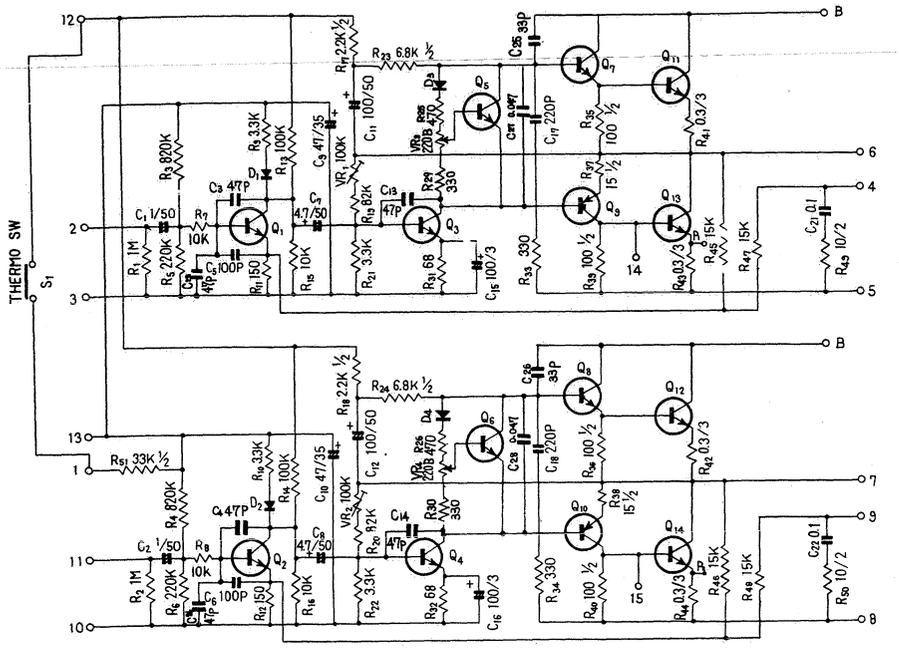

$TH_1 \sim TH_2$ THERMISTOR D22A

SEMICONDUCTORS

Q_1 , Q_2	2SC458LG
Q_3 , Q_4	2SC627-1 or 2
Q_5 , Q_6	2SC984-C or B
Q_7 , Q_8	2SC484-Y or BL
Q_9 , Q_{10}	2SA484-Y or BL
$Q_{11} \sim Q_{14}$	2SC1079
D_1 , D_2	SIB01-005
$D_3 \sim D_4$	VB-11

SWITCH UNIT

SWITCH UNIT
W26-004

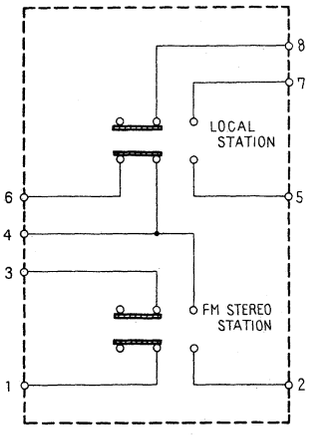

SWITCH UNIT

SWITCH UNIT
W26-005

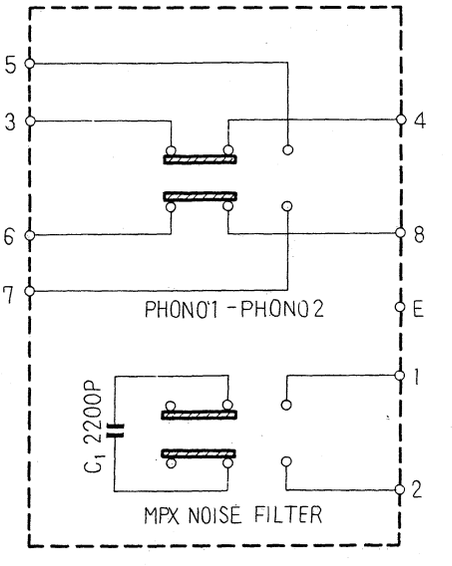

81

SWITCH UNIT

SWITCH UNIT
W26-006

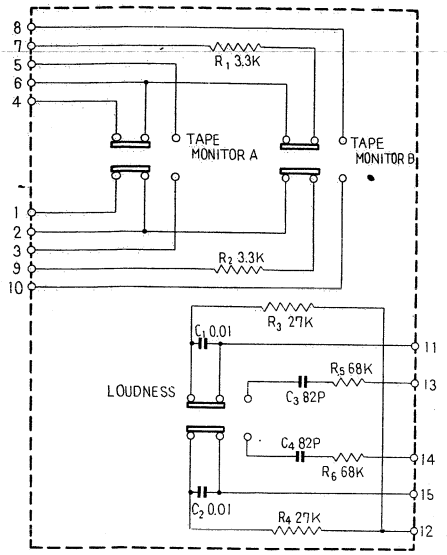

SWITCH UNIT

SWITCH UNIT
W26-007

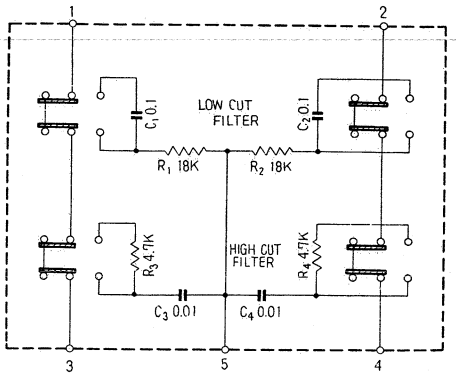

AUTO TUNING UNIT

AUTO TUNING UNIT
W18-015

D1 ~ D10 : 1S188
Q1 ~ Q5 , Q10 ~ Q14 : 2SC870
Q6 Q7 : 2SC984
Q8 Q9 : 2SA565

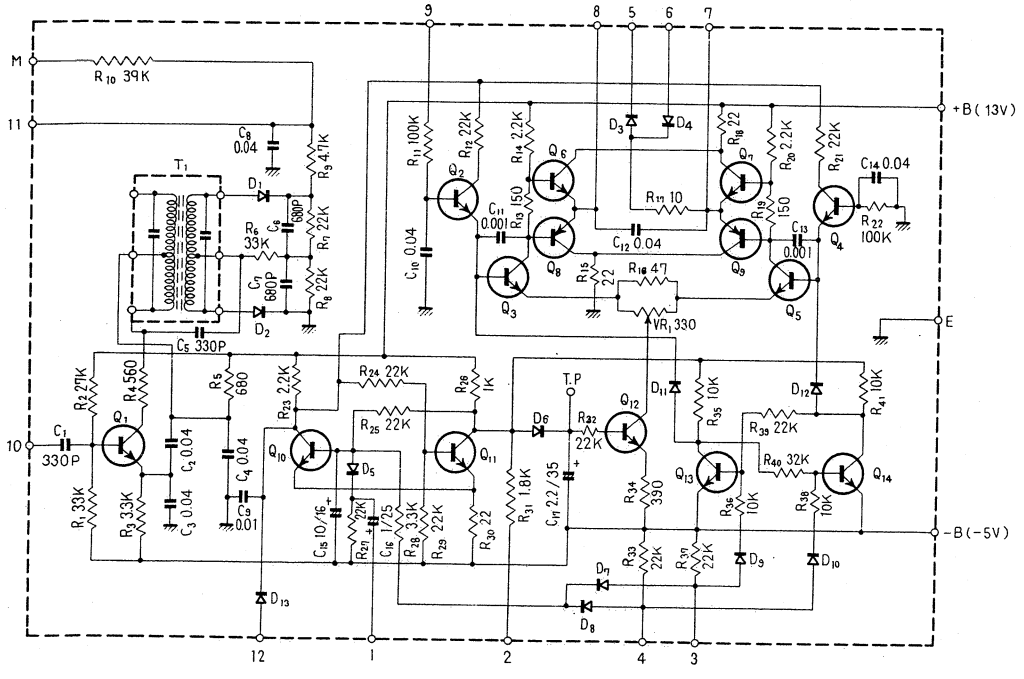

82

PROTECTOR UNIT

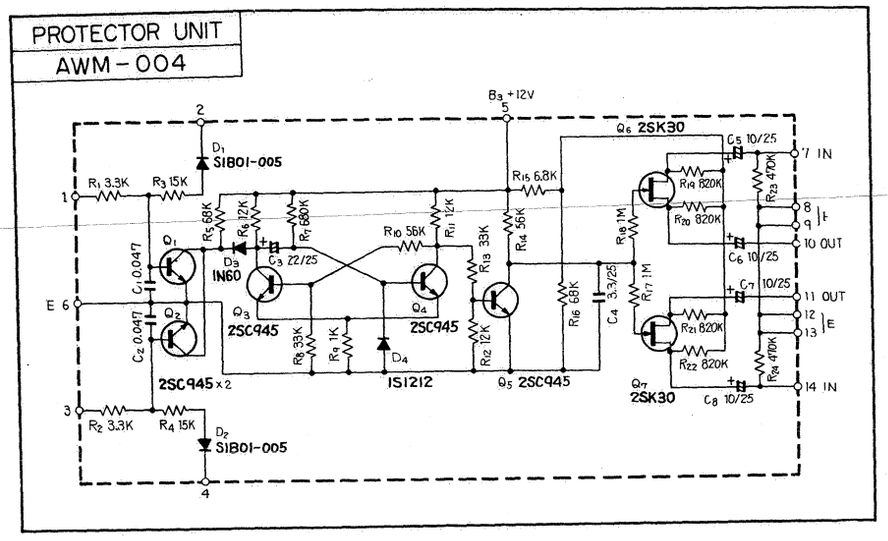

INDICATOR UNIT

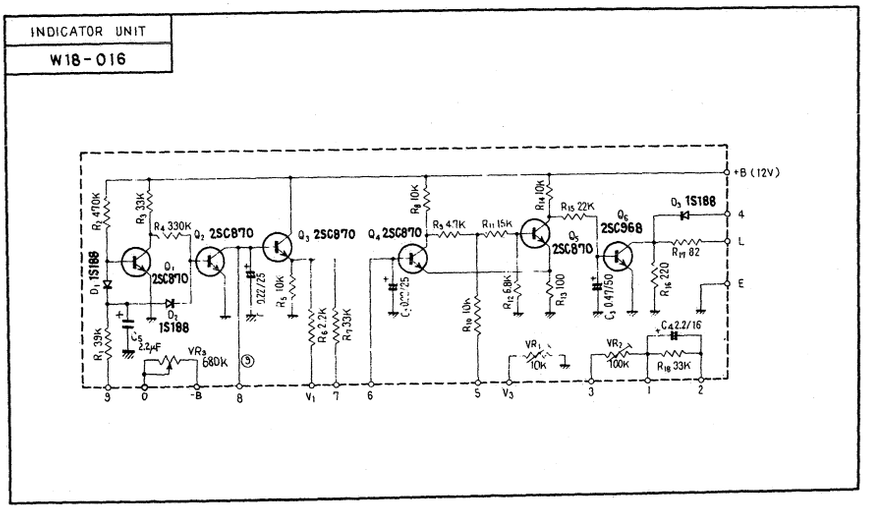

83